Hisense

Qingdao Hisense Hitachi Air-conditioning Systems Co.,Ltd.

Add.: No. 218, Qianwangang Road, Economic and Technological Development Zone, Qingdao, China

http://www.hisense-vrf.com E-mail: export@hisensehitachi.com

Specifications in this catalogue are subject to change without notice, in order that Hisense may bring the latest innovations to their customers.

TCY12021017A

Hisense

AIR-TO-WATER HEAT PUMP

TCY12021017A

Hisense

AIR-TO-WATER HEAT PUMP

Technical, Installation and Service Handbook

Hi-Therma SERIES

BASIC MODELS

AHM-044HCDSAA
AHM-060HCDSAA
AHM-080HCDSAA
AHW-044HCDS1
AHW-060HCDS1
AHW-080HCDS1
AHZ-044HCDS1
AHZ-080HCDS1

TCY12021017A ▶▶ Date: Dec. 2021

English

Specifications in this manual are subject to change without notice in order that Hisense may bring the latest innovations to their customers.

The English version is the original one; other languages are translated from English. Should any discrepancy occur between the English and the translated versions, the English version shall prevail.

Español

Las especificaciones de este manual están sujetas a cambios sin previo aviso a fin de que Hisense pueda ofrecer las últimas innovaciones a sus clientes.

La versión en inglés es la original, y las versiones en otros idiomas son traducciones de la inglesa. En caso de discrepancias entre la versión inglesa y las versiones traducidas, prevalecerá la versión inglesa.

Deutsch

Bei den technischen Angaben in diesem Handbuch sind Änderungen vorbehalten, damit Hisense seinen Kunden die jeweils neuesten Innovationen präsentieren kann.
Die englische Fassung ist das Original, und die Fassungen in anderen Sprachen werden aus dem Englischen über-setzt. Sollten die englische und die übersetzten Fassungen voneinander abweichen, so hat die englische Fassung Vorrang.

Français

Les caractéristiques publiées dans ce manuel peuvent être modifiées sans préavis, Hisense souhaitant pouvoir toujours offrir à ses clients les dernières innovations.
La version anglaise est la version originale; les autres langues sont traduites de l'anglais. En cas de divergence entre les versions anglaise et traduite, la version anglaise prévaudra.

Italiano

Le specifiche di questo manuale sono soggette a modifica senza preavviso affinché Hisense possa offrire ai propri clienti le ultime novità.
La versione inglese è l'originale e le versioni in altre lingue sono traduzioni dall'inglese. In caso di divergenze tra la versione inglese e quelle tradotte, fa fede la versione inglese.

Português

As especificações apresentadas neste manual estão sujeitas a alterações sem aviso prévio, de modo a que a Hisense possa oferecer aos seus clientes, da forma mais expedita possível, as inovações mais recentes.
A versão inglesa é a original; as versões em outras línguas são traduzidas do inglês. Em caso de divergência entre a versão em língua inglesa e as versões traduzidas, faz fé a versão em língua inglesa.

Polski

Zamieszczone w niniejszej instrukcji obsługi dane techniczne mogą ulec zmianie bez uprzedniego powiadomienia ze względu na innowacyjne rozwiązania, jakie firma Hisense nieustannie wprowadza z myślą o swoich klientach.
Wersja angielska jest wersją oryginalną - wszystkie pozostałe stanowią jej tłumaczenie na odpowiednie języki. W przypadku stwierdzenia jakichkolwiek rozbieżności między oryginałem a jego tłumaczeniem, rozstrzygająca jest wersja w języku angielskim.

Nederlands

De specificaties in deze handleiding kunnen worden gewijzigd zonder verdere kennisgeving zodat Hisense zijn klanten kan voorzien van de nieuwste innovaties.
De Engelse versie is de originele; andere talen zijn vertaald uit het Engels. In geval van verschillen tussen de En-gelse versie en de vertaalde versies, heeft de Engelse versie voorrang.

Türkçe

Bu kılavuzdaki teknik özellikler Hisense'nin müşterilerine en yeni inovasyonları sunabilmesi için önceden haber verilmeden değiştirilebilir.
İngilizce sürüm orijinal olanıdır ve diğer diller İngilizce'den çevrilmiştir. İngilizce ve çevrilmiş sürümler arasında farklılık olması durumunda İngilizce sürüm esas alınmalıdır.

Română

Specificațiile din acest manual pot fi modificate fără notificare prealabilă, pentru ca Hisense să poată pune la dispoziția clienților noștri ultimele inovații.
Versiunea originală este cea în limba engleză; versiunile în alte limbi sunt traduse din limba engleză. Dacă există vreo discrepanță între versiunile în limba engleză și versiunea tradusă, prevalează versiunea în limba engleză.

⚠ CAUTION

This product shall not be mixed with general house waste at the end of its life and it shall be retired according to the appropriate local or national regulations in an environmentally correct way.
Due to the refrigerant, oil and other components contained in heat pump, its dismantling must be done by a professional installer according to the applicable regulations. Contact to the corresponding authorities for more information.

⚠ PRECAUCIÓN

Éste producto no se debe eliminar con la basura doméstica al final de su vida útil y se debe desechar de manera respetuosa con e medio ambiente de acuerdo con los reglamentos locales o nacionales aplicables.
Debido al refrigerante, el aceite y otros componentes contenidos en la bomba de calor, su desmontaje debe realizarlo un instalador profesional de acuerdo con la normativa aplicable. Para obtener más información, póngase en contacto con las autoridades competentes.

⚠ VORSICHT

Dass Ihr Produkt am Ende seiner Betriebsdauer nicht in den allgemeinen Hausmüll geworfen werden darf, sondern entsprechend den geltenden örtlichen und nationalen Bestimmungen auf umweltfreundliche Weise entsorgt werden muss.
Aufgrund des Kältemittels, Öls und anderer Komponenten in der Wärmepumpe muss ihr Ausbau von einem professionellen Installateur entsprechend der anwendbaren Vorschriften durchgeführt werden. Für weitere Informationen setzen Sie sich bitte mit den entsprechenden Behörden in Verbindung.

⚠ ADVERTISSEMENT

Ne doit pas être mélangé aux ordures ménagères ordinaires à la fin de sa vie utile et qu'il doit être éliminé conformément à l réglementation locale ou nationale, dans le plus strict respect de l'environnement.
En raison du frigorigène, de l'huile et des autres composants que contient la pompe à chaleur, son démontage doit être effectué par un installateur professionnel conformément aux règlementations en vigueur.

⚠ AVVERTENZE

Indicazioni per il corretto smaltimento del prodotto ai sensi della Direttiva Europea 2011/65/EU e D.Lgs 4 marzo 2014 n.27
Il simbolo del cassonetto barrato riportato sull' apparecchiatura indica che il prodotto alla fine della propria vita utile deve essere raccolt separatamente dagli altri rifiuti
L'utente dovrà, pertanto, conferire l'apparecchiatura giunta a fine vita agli idonei centri di raccolta di ferenziata dei rifiuti elettronici ed elettrotecnici, oppure riconsegnarla al rivenditore al momento dell' acquisto di una nuova apparecchiatura di tipo equivalente.
L'adeguata raccolta differenziata delle apparecchiature dismesse, per il loro avvio al riciclaggio, al trattamento ed allo smaltimento ambientalmente compatibile, contribuisce ad evitare possibili effetti negativi sull' ambiente e sulla salute e favorisce il riciclo dei materiali di cui è composta l' apparecchiatura.
Non tentate di smontare il sistema o l'unità da soli poichè ciò potrebbe causare effetti dannosi sulla vostra salute o sull' ambiente.
Vogliate contattare l' installatore, il rivenditore, o le autorità locali per ulteriori informazioni.
Lo smaltimento abusivo del prodotto da parte dell'utente può comportare l'applicazione delle sanzioni amministrative di cui all'articolo 50 e seguenti del D.Lgs. n. 22/1997.

⚠ CUIDADO

O seu produto não deve ser misturado com os desperdícios domésticos de carácter geral no final da sua duração e que deve se eliminado de acordo com os regulamentos locais ou nacionais adequados de uma forma correcta para o meio ambiente.
Por causa do refrigerante, do óleo e de outros componentes na bomba de calor, o desmantelamento deve ser realizado por um instalador profissional em conformidade com os regulamentos aplicáveis. Co tacte as autoridades correspondentes para obter mais informações.

⚠ OSTROŻNIE

Po zakończeniu okresu użytkowania produktu, nie należy go wyrzucać z odpadami komunalnymi, lecz dokonać jego usunięcia w sposób ekologiczny zgodnie z obowiązującymi w tym zakresie przepisami prawa lokalnego lub krajowego.
Ponieważ pompa ciepła zawiera czynniki chłodnicze i oleje oraz innego rodzaju elementy składowe, jej demontaż należy powierzyć wskazanemu w obowiązujących przepisach specjalistycznemu podmiotowi. Szczegółowe informacje na ten temat można uzyskać, kontaktując się z właściwymi organami władzy samorządowej.

⚠ VOORZICHTIG

Dit houdt in dat uw product niet wordt gemengd met gewoon huisvuil wanneer u het weg doet en dat het wordt gescheiden op een milieuvriendelijke manier volgens de geldige plaatselijke en landelijke reguleringen.
Wegens de aanwezigheid van koelmiddel, olie en andere componenten in de warmtepomp moet het apparaat volgens de toepasselijke regelgeving door een professionele installateur worden gedemonteerd. Neem contact op met de betreffende overheidsdienst voor meer informatie.

⚠ DİKKAT

Bu ürün kullanım ömrü dolduğunda genel ev atıklarıyla karıştırılmamalı ve belirlenmiş yerel veya ulusal yönetmeliklere göre çevre dostu biçimde bertaraf edilmelidir.
Isı pompasında yer alan soğutucu madde, yağ ve diğer bileşenlerden dolayı sökme işlemi, uygulanır yönetmeliklere göre profesyonel bir tesisatçı tarafından yapılmalıdır. Daha fazla bilgi için ilgili merciye başvurun.

⚠ PRECAUȚIE

Acest produs nu trebuie aruncat la gunoiul menajer la sfârșitul duratei sale de viață, ci trebuie scos din uz în conformitate cu reglementările locale sau naționale adecvate și într-un mod corect din punct de vedere al protecției mediului.
Datorită agentului frigorific, a uleiului și a altor componente pompei de căldură, demontarea acestuia trebuie făcută de un instalator profesionist în conformitate cu reglementările aplicabile. Contactați autoritățile competente pentru mai multe informații.

TECHNICAL PARAMETERS

English

Following Regulation EU No. 517/2014 on Certain Fluorinated Greenhouse gases, it is mandatory to fill in the label attached to the unit with the total amount of refrigerant charged on the installation.
Do not vent R32 into the atmosphere: R32 are fluorinated greenhouse gases covered by the Kyoto protocol global warming potential (GWP) R32 = 675.
Tn of CO_2 equivalent of fluorinated greenhouse gases contained is calculated by indicated GWP * Total Charge (in kg) indicated in the product label and divided by 1000.

Español

De acuerdo con el reglamento UE Nº 517/2014 sobre determinados gases fluora os de efecto invernadero, es obligatorio rellenar la etiqueta suministrada con la unidad con la cantidad total de refrigerante con que se ha cargado la instalación.
No descargue el R32 en la atmósfera: R32 son gases fluorados cubiertos por el protocolo de Kyoto con un potencial de calentamiento global (GWP) = 675.
Las Tn de CO_2 equivalente de gases fluorados de efecto invernadero contenidos se calcula por el PCA indicado * Carga Total (en kg) indicada en la etiqueta del producto y dividida por 1000.

Deutsch

Folgende Verordnung EG Nr. 517/2014 Bestimmte fluorierte Treibhausgase, auf dem Schild, das sich am Gerät befindet, muss die Gesamtkältemittelmenge verzeichnet sein, die bei der Installation eingefüll wird.
Lassen sie R32 nicht in die luft entweichen: R32 sind fluorierte treibhausgase, die durch das Kyoto-protokoll erfasst sind. Sie besitzen folgendes treibhaus-potential (GWP) R32 = 675.
Die Menge an CO_2-Äquivalent fluorierte Treibhausgase enthalten (in Tn) wird von GWP * die auf dem Produktetikett angegebenen Gesamtfüllmenge (in kg und durch 1000 geteilt berechnet.

Français

En fonction de la Réglementation CE Nº 517/2014 concernant certains gaz à effet de serre fluorés, il est obligatoire de remplir l'étiquette attachée à l'unité en indiquant la quantité de fluide frigorigène qui a été chargée à l'installation
Ne laissez pas le R32 se répandre dans l'atmosphère: le R32 sont des gaz à effet de serre fluorés, couverts par le protocole de Kyoto avec un potentiel de rechauffement global (PRG) R32 = 675.
Les Tn d'équivalent-CO_2 de gaz à effet de serre fluorés contenus est calculé par le PRG * Charge Totale (en kg) indiquée dans l'étiquette du produit et divisé par 1,000.

Italiano

In base alla Normativa EC Nº 517/2014 su determinati gas fluorurati ad effetto serra, è obbligatorio compilare l'etichetta che si trova sull'unità inserendo la quantità totale di refrigerante caricato nell'installazione.
Non scaricare R32 nell'atmosfera: R32 sono gas fluorurati ad effetto serra che in base al protocollo di Kyoto presentano un potenziale riscaldamento globale (GWP) R32 = 675.
Le Tn di CO_2 equivalente di gas fluorurati ad effetto serra contenuti si calcola dal GWP indicato * Carica Totale (in kg) indicato nella etichetta del prodotto e diviso per 1000.

Português

Em conformidade com a Regulamentação da UE Nº 517/2014 sobre determinados gases fluorados com efeito de estufa, é obrigatório preencher a etiqueta afixada na unidade com a quantidade total de refrigerante carregada na instalação
Não ventilar R32 para a atmosfera: o R32 são gases fluorados com efeito de estufa abrangidos pelo potencial de aquecimiento global (GWP) do protocolo de Quioto = 675.
Tn de CO_2 equivalente de gases fluorados com efeito de estufa é calculado pelo GWP indicado * Carga Total (em kg) indicado no rótulo de produto e dividido por 1000.

Polski

Zgodnie z Rozporządzeniem UE nr 517/2014 w sprawie fluorowanych gazów cieplarnianych, wymagane jest podanie na etykiecie informacyjnej umieszczonej na klimatyzatorze ilości czynnika chłodniczego wprowadzanego do obiegu instalacji klimatyzacyjnej.
Nie należy uwalniać czynnika chłodniczego R32 do atmosfery: w jego skład wchodzą uwzględnione w protokole z Kioto fluorowane gazy cieplarniane o potencjalnym wpływie na globalne ocieplenie (GWP), R32 = 675.
W celu obliczenia wyrażonej równoważnikiem CO_2 Ilości fluorowanych gazów cieplarnianych (w tonach), mnożymy podaną wartość GWP przez wskazaną na etykiecie całkowitą masę gazu w instalacji (w kg) i uzyskany wynik dzielimy przez 1000.

Nederlands

Conform richtlijn EC Nº 517/2014 voor bepaalde fluorbroeikasgassen, dient u de tabel in te vullen op de unit met het totale koelmiddelvolume in de installatie. Laat geen R32 ontsnappen in de atmosfeer: R32 zijn fluorbroeikasgassen die vallen onder het protocol van Kyoto inzake klimaatverandering global warming potential (GWP) R32 = 675.
Tn van CO_2-equivalent van fluorbroeika gassen wordt berekend door het aangegeven GWP * Totale Hoeveelheid (in kg) aangegeven in het product label en gedeeld door 1000.

Türkçe

Florlu Belli Sera gazları hakkındaki AB Yönetmeliği No. 517/2014 uyarınca üniteye iliştirilmiş etikete kurulumda doldurulan toplam soğutma gazı miktarının yazılması zorunludur.
R32'yi atmosfere tahliye etmeyin: R32, Kyoto protokolü küresel uyarı potansiyeli (GWP) R32 = 675 kapsamında florlu sera gazlarıdır.
Florlu sera gazlarının CO_2 eşdeğer tonu, ürün etiketinde belirtilen endike GWP * Toplam Dolum miktarı (kg olarak) çarpımının 1000'e bölünmesiyle hesaplanır.

Română

În conformitate cu Regulamentul UE 517/2014 privind anumite gaze fluorurate cu efect de seră, este obligatorie completarea etichetei atașate la unitate cu cantitatea totală de agent frigorific încărcat în instalație.
Nu evacuați R32 în atmosferă: R32 sunt gaze fluorurate cu efect de seră care cad sub incidența potențialului de încălzire globală al Protocolului de la Kyoto (GWP) R32 = 675.
Tonajul echivalent CO_2 al gazelor fluorurate cu efect de seră conținute se calculează prin indicarea GWP * Cantitate totală (în kg) indicată în eticheta produsului și împărțită la 1000.

English (Only when using R32)

WARNING

BURST HAZARD

Do not allow air or any gas mixture containing oxygen into refrigerant cycle (i.e. piping)

RISK OF EXPLOSION

The compressor must be stopped before removing the refrigerant pipes.

All service valves must be fully closed after pumping down operation.

WARNING

This symbol displayed on the unit indicates that this appliance is filled with R32, an odourless flammable refrigerant gas with low burning velocity (A2L class pursuant to ISO 817). If the refrigerant is leaked, there is a possibility of ignition if it enters in contact with an external ignition source.

CAUTION

This symbol displayed on the unit indicates that this appliance shall be handled by authorized service personnel only, referring to the Installation Manual.

CAUTION

This symbol displayed on the unit indicates that there is relevant information included in the Operation Manual and/or Installation Manual.

Español (Sólo cuando se utiliza R32)

ADVERTENCIA

RIESGO DE EXPLOSIÓN

Evite la entrada de aire o cualquier mezcla de gases que contenga oxígeno en el ciclo de refrigerante, por ejemplo, en las tuberías.

RIESGO DE EXPLOSIÓN

Antes de retirar las tuberías de refrigerante debe detener el compresor.

Tras recuperar el refrigerante todas las válvulas de servicio deben estar completamente cerradas.

ADVERTENCIA

Este símbolo mostrado en el aparato indica que este está cargado con R32, un gas refrigerante inflamable e inodoro con una velocidad de combustión lenta (Clase A2L de acuerdo con ISO 817). Una fuga de refrigerante puede provocar un incendio si entra en contacto con una fuente de combustión externa.

PRECAUCIÓN

Este símbolo mostrado en el aparato indica que este debe ser manipulado únicamente por personal de un servicio autorizado con el soporte del manual de instalación.

PRECAUCIÓN

Este símbolo mostrado en el aparato indica que los manuales de funcionamiento y/o de instalación contienen información importante.

Deutsch (Nur bei Verwendung von R32)

WARNUNG

BERSTGEFAHR

Lassen Sie nicht zu, dass Luft oder eine Sauerstoff enthaltene Gasmischung in den Kältemittelkreislauf (z. B. Rohrleitungen) gelangt.

EXPLOSIONSGEFAHR

Der Kompressor muss abgeschaltet werden, bevor die Kältemittelleitungen entfernt werden.

Alle Betriebsventile müssen nach dem Abpumpbetrieb vollständig geschlossen sein.

WARNUNG

Dieses auf dem Gerät angezeigte Symbol zeigt an, dass das Gerät ist mit dem R32 geruchlosen brennbaren Kältemittel mit niedriger Brenngeschwindigkeit gefüllt (Klasse A2L gemäß ISO 817). Bei einem Kältemittelaustritt besteht die Gefahr der Entzündung, wenn das Kältemittel in Kontakt mit einer äußeren Zündquelle kommt.

VORSICHT

Dieses auf dem Gerät angezeigte Symbol zeigt an, dass dieses Gerät ein entzündbares Kältemittel verwendet. Bei einem Kältemittelaustritt besteht die Gefahr der Entzündung, wenn das Kältemittel in Kontakt mit einer äußeren Zündquelle kommt.

VORSICHT

Dieses auf dem Gerät angezeigte Symbol zeigt an, dass wichtige Informationen im Betriebshandbuch und/oder Installationshandbuch enthalten sind.

Français (Seulement en utilisant R32)

AVERTISSEMENT

DANGER D'ÉCLATEMENT

Évitez que de l'air ou un mélange de gaz contenant de l'oxygène ne pénètre dans le cycle frigorifique (c.-à-d. tuyauterie)

RISQUE D'EXPLOSION

Veillez à arrêter le compresseur avant de retirer les tuyauteries frigorifiques.

Veillez à fermer complètement toutes les vannes de service après la vidange.

AVERTISSEMENT

Ce symbole affiché sur l'appareil indique que l'appareil est chargé avec R32, un gaz frigorigène inflammable sans odeur à basse vitesse de combustion (Classe A2L selon ISO 817). En cas de fuite de frigorigène, il existe un risque d'incendie si celui-ci est exposé à une source d'inflammation externe.

ATTENTION

Ce symbole affiché sur l'appareil indique que seul le personnel de maintenance autorisé doit manipuler l'équipement, en se reportant au manuel d'installation.

ATTENTION

Ce symbole affiché sur l'appareil indique que le manuel de fonctionnement et/ou le manuel d'installation contient des informations importantes.

Italiano (Solo quando si usa R32)

AVVERTENZA

PERICOLO DI SCOPPIO

Fare in modo che all'interno del ciclo di refrigerazione non entrino aria o qualsiasi miscela di gas contenente ossigeno (per es. le tubazioni).

RISCHIO DI ESPLOSIONE

Il compressore deve essere arrestato prima di rimuovere i tubi del refrigerante.

Tutte le valvole di servizio devono essere completamente chiuse dopo lo svuotamento della pompa.

AVVERTENZA

Questo simbolo visualizzato sull'unità indica che l'unità é caricata con R32, un gas refrigerante infiammabile e inodore con una velocità di combustione lenta (Classe A2L secondo ISO 817). Una perdita di refrigerante può provocare un incendio se entra a contatto con una fonte di combustione esterna.

AVVERTENZA

Questo simbolo visualizzato sull'unità indica che l'unità deve essere gestita solo da personale di servizio autorizzato, facendo riferimento al Manuale di Installazione.

AVVERTENZA

Questo simbolo visualizzato sull'unità indica che ci sono informazioni rilevanti incluse nel Manuale d'uso e/o nel Manuale di Installazione.

Português (Somente quando usar R32)

ATENÇÃO

PERIGO DE REBENTAMENTO

Não permitir a entrada de ar ou de qualquer mistura de gás com oxigénio para o ciclo de refrigeração (isto é, para tubagem).

RISCO DE EXPLOSÃO

O compressor deve ser desligado antes da remoção dos tubos de refrigerante.

As válvulas de manutenção devem estar completamente fechadas depois da eliminação do refrigerante.

ATENÇÃO

Este símbolo mostrado na unidade indica que a unidade contém R32, um gás refrigerante inflamável e inodoro com uma baixa velocidade de queima (Classe A2L de acordo com ISO 817). Em caso de fuga de refrigerante, existe a possibilidade de ignição se entrar em contacto com uma fonte de ignição externa.

CUIDADO

Este símbolo mostrado na unidade indica que a unidade deve ser manuseada apenas por pessoal autorizado, mediante consulta do Manual de Instalação.

CUIDADO

Este símbolo mostrado na unidade indica que o Manual de Funcionamento e/ou Instalação inclui informação relevante.

Polski (Tylko w przypadku stosowania czynnika chłodniczego R32)

OSTRZEŻENIE

ZAGROŻENIE WYBUCHEM

Niedopuszczalne jest przedostanie się powietrza lub mieszaniny gazowej zawierającej tlen do obiegu (tj. przewodów rurowych) czynnika chłodniczego.

RYZYKO WYBUCHU

Przed odłączeniem przewodów rurowych czynnika chłodniczego należy wyłączyć sprężarkę.
Po odzyskaniu chłodziwa, niezbędne jest całkowite zamknięcie wszystkich zaworów serwisowych.

OSTRZEŻENIE

Umieszczenie tego symbolu na jednostce oznacza, że jest ona napełniona czynnikiem chłodniczym R32, bezwonnym i palnym gazem o niskiej prędkości spalania (klasa A2L zgodnie z normą ISO 817). Wyciek chłodziwa może spowodować pożar, gdyby doszło do kontaktu z zewnętrznym źródłem zapłonu.

OSTROŻNIE

Umieszczenie tego symbolu na jednostce oznacza, że może być ona obsługiwana wyłącznie przez pracowników autoryzowanego serwisu w oparciu o informacje zawarte w Instrukcji instalacji.

OSTROŻNIE

Umieszczenie tego symbolu na jednostce oznacza, że w Instrukcji obsługi i/lub Instrukcji instalacji znajdują się ważne informacje na dany temat.

Nederlands (Alleen bij gebruik van R32)

WAARSCHUWING

BARSTGEVAAR

Laat geen lucht of een gasmengsel dat zuurstof bevat in de koelmiddelcyclus (d.w.z. leidingen).

EXPLOSIEGEVAAR

De compressor moet worden gestopt alvorens de koelmiddelpijpen te verwijderen.

Alle onderhoudskranen moeten volledig gesloten zijn na het pompen.

WAARSCHUWING

Dit symbool op het apparaat geeft aan dat het apparaat is gevuld met R32, een geurloos ontvlambaar koelmiddel met een lage brandsnelheid (klasse A2L volgens ISO 817). Als het koelmiddel lekt, kan het ontbranden wanneer het in contact komt met een externe ontstekingsbron.

LET OP

Dit symbool op het apparaat geeft aan dat het apparaat alleen door bevoegd personeel mag worden gebruikt, met verwijzing naar de installatiehandleiding.

LET OP

Dit symbool op het apparaat geeft aan dat er relevante informatie is opgenomen in de gebruiksaanwijzing en / of installatiehandleiding.

Türkçe (Yalnızca R32'yi kullanırken)

UYARI

PATLAMA TEHLİKESİ

Soğutucu madde döngüsünün (ör. boruların) içine havanın ya da oksijen içeren herhangi bir gaz karışımının girmesine izin vermeyin

PATLAMA RİSKİ

Soğutucu madde boruları sökülmeden önce kompresör mutlaka durdurulmalıdır.

Pompayla boşaltma işleminden sonra tüm servis valfleri mutlaka tamamen kapatılmalıdır.

UYARI

Ünitede görüntülenen bu sembol, bu cihazın düşük yanma hızına sahip kokusuz ve tutuşucu soğutucu gazı olan R32 ile dolu olduğunu gösterir (ISO 817'ye göre A2L sınıfı). Soğutucu gazı sızarsa harici bir ateşleme kaynağına temas etmesi durumunda tutuşma olasılığı vardır.

DİKKAT

Ünitede görüntülenen bu sembol, bu cihazla ilgili işlemlerin yalnızca yetkili servis personeli tarafından Kurulum Kılavuzuna başvurularak yapılacağını gösterir.

DİKKAT

Ünitede görüntülenen bu sembol, Kullanım Kılavuzunda ve/veya Kurulum Kılavuzunda ilgili bilgilerin mevcut olduğunu gösterir.

Română (numai când se folosește R32)

AVERTISMENT

PERICOL DE DEFLAGRAȚIE

Nu permiteți pătrunderea aerului sau oricărui amestec de gaz care conține oxigen în ciclul agentului frigorific (adică în conducte).

RISC DE EXPLOZIE

Trebuie să opriți compresorul înainte de a decupla conductele de agent frigorific.
Toate supapele de serviciu trebuie să fie complet închise după finalizarea operației de evacuare a agentului frigorific.

AVERTISMENT

Această pictogramă afișată pe unitate indică faptul că acest aparat este umplut cu R32, un gaz frigorific inflamabil inodor, cu viteză de ardere redusă (clasa A2L conform standardului ISO 817). Pierderile de agent frigorific pot cauza pericol de aprindere dacă intră în contact cu o sursă de aprindere externă.

PRECAUȚIE

Această pictogramă afișată pe unitate indică faptul că acest aparat trebuie să fie manipulat doar de personal de service autorizat, respectându-se instrucțiunile din manualul de instalare.

PRECAUȚIE

Această pictogramă afișată pe unitate indică faptul că manualul de operare și/sau manualul de instalare conțin informații importante.

1 GENERAL INFORMATION

1.1 GENERAL NOTES

- This manual gives a common description and information for this heat pump air conditioner which you operate as well for other models.
- This manual should be considered as a permanent part of the heat pump air conditioning equipment and should remain with the air conditioning equipment.
- No part of this publication may be reproduced, copied, filed or transmitted in any shape or form without the permission of Hisense.
- Within the policy of continuous improvement of its products, Hisense reserves the right to make changes at any time without prior notification and without being compelled to introducing them into products previously sold. This document may therefore have been subject to amendments during the life of the product.
- As a result, some of the images or data used to illustrate this document may not refer to specific models. No claims will be accepted based on the data, illustrations and descriptions included in this manual.
- This heat pump air conditioner has been designed for the following ambient temperatures. Please operate the air conditioner within the ranges.

Working range (Heating)	Outdoor ambient temperature	°C (DB)	-25~35
	Outlet water temperature	°C	15~60
Working range (Cooling)	Outdoor ambient temperature	°C (DB)	5~46
	Outlet water temperature	°C	5~22
Working range (DHW)	Outdoor ambient temperature	°C (DB)	-25~40
	Tank water temperature	°C	30~55(75*)

DB: Dry Bulb

*: When there is an DHW electric heater mounted in the DHW tank, the setting temperature can reach 75 °C.

- Upon receiving this product, inspect it for any shipping damage. Claims for damage, either apparent or concealed, in a written form, should be filed immediately with the shipping company.
- Check the model number, electrical characteristics (power supply, voltage and frequency) and accessories to determine if they are correct.
- The standard utilization of the unit shall be explained in these instructions. Therefore, the utilization of the unit other than those indicated in these instructions is not recommended. Please contact your local agent, as the occasion arises.
- If you have any questions, please contact your dealer or designated service center of Hisense.

1.2 GENERAL SAFETY

- **Notice: Servicing shall be performed only as recommended by the manufacturer.**
- **Qualification of workers**

  Warning: Every working procedure that affects safety means shall only be carried out by competent persons.

  Examples for such working procedures are:
  - breaking into the refrigerating circuit.
  - opening of sealed components.
  - opening of ventilated enclosures.
- **Information on servicing**

  - Prior to beginning work on systems, safety checks are necessary to ensure that the risk of ignition is minimized.
  - Work shall be undertaken under a controlled procedure so as to minimized the risk of flammable gas or vapor being present while the work is being performed.
  - Work in confined spaces shall be avoided. The area around the workspace shall be sectioned off. Ensure that the conditions within the area have been made safe by control of flammable material.
- **Checking for presence of refrigerant**

  - The area shall be checked with an appropriate refrigerant detector prior to and during work. The leak detection equipment should be suitable for use with all applicable refrigerants, i.e. non-sparking, adequately sealed or intrinsically safe.
- **Presence of fire extinguisher**

  - If any hot work is to be conducted, appropriate fire extinguishing equipment shall be available to hand. Have a dry powder or CO_2 fire extinguisher adjacent to the charging area.
- **No ignition sources**

  - All possible ignition sources, including cigarette smoking, should be kept sufficiently far away from the site of installation, repairing, removing and disposal. Prior to work taking place, the area around the equipment is to be surveyed to make sure that there are no flammable hazards or ignition risks. “No Smoking” signs shall be displayed.
- **Ventilated area**

  - Ensure that the area is in the open or that it is adequately ventilated before breaking into the system or conducting any hot work. A degree of ventilation shall continue during the period that the work is carried out. The ventilation should safely disperse any released refrigerant and preferably expel it externally into the atmosphere.
- **Checks to the refrigeration equipment**

  - where electrical components are being changed, they shall be fit for the purpose and to the correct specification. At all times the manufacturer’s maintenance and service guidelines shall be followed. If in doubt, consult the manufacturer’s technical department for assistance.

  The following checks shall be applied to installations
  - The charge size is in accordance with the room size within which the refrigerant containing parts are installed.

- The ventilation machinery and outlets are operating adequately and are not obstructed.
- If an indirect refrigerating circuit is being used, the secondary circuit shall be checked for the presence of refrigerant.
- Marking to the equipment continues to be visible and legible. Markings and signs that are illegible shall be corrected.
- Refrigeration pipe or components are installed in a position where they are unlikely to be exposed to any substance which may corrode refrigerant containing components, unless the components are constructed of materials which are inherently resistant to being corroded or are suitably protected against being so corroded.

- **Checks to electrical devices**
  - Repair and maintenance to electrical components shall include initial safety checks and component inspection procedures. If a fault exists that could compromise safety, then no electrical supply shall be connected to the circuit until it is satisfactorily dealt with. If the fault cannot be corrected immediately but it is necessary to continue operation, an adequate temporary solution shall be used. This shall be reported to the owner of the equipment, so that all parties are advised.
  - Initial safety checks shall include:
  (1) that capacitors are discharged: this shall be done in a safe manner to avoid possibility of sparking;
  (2) that no live electrical components and wiring are exposed while charging, recovering or purging the system;
  (3) that there is continuity of earth bonding.
- **Repairs to sealed components**
  - During repairs to sealed components, all electrical supplies shall be disconnected prior to any removal of sealed covers, etc. If it is absolutely necessary to have an electrical supply to equipment during servicing, then a permanently operating form of leak detection shall be located at the most critical point to warn of a potentially hazardous situation.
  - Ensure that by working on electrical components, the casing is not altered in such a way that the level of protection is affected, including damage to cables, excessive number of connections, terminals not made to original specification, damage to seals, incorrect fitting of glands, etc.
  - Ensure that the apparatus is mounted securely.
  - Ensure that seals or sealing materials have not degraded to the point that they no longer serve the purpose of preventing the ingress of flammable atmospheres. Replacement parts shall be in accordance with the manufacturer's specifications.
- **Repair to intrinsically safe components**
  - Do not apply any permanent inductive or capacitance loads to the circuit without ensuring that this will not exceed the permissible voltage and current permitted for the equipment in use.
  - Intrinsically safe components are the only types that can be worked on while live in the presence of a flammable atmosphere.
  - Replace components only with parts specified by the manufacturer. Other parts may result in the ignition of refrigerant in the atmosphere from a leak.
- **Cabling**
  - Check that cabling will not be subject to wear, corrosion, excessive pressure, vibration, sharp edges or any other adverse environmental effects. The check shall also take into account the effects of aging or continual vibration from sources such as compressors or fans.
- **Detection of flammable refrigerants**
  - Under no circumstances shall potential sources of ignition be used in the searching for or detection of refrigerant leaks. A halide torch (or any other detector using a naked flame) shall not be used.
- **Leak detection methods**
  - Electronic leak detectors may be used to detect refrigerant leaks but the sensitivity may not be adequate, or may need re-calibration for the flammable refrigerants.
  - Ensure that the detector is not a potential source of ignition and is suitable for the refrigerant used. Leak detection equipment shall be set at a percentage of the LFL of the refrigerant and shall be calibrated to the refrigerant employed, and the appropriate percentage of gas (25 % maximum) is confirmed.
  - The use of detergents containing chlorine shall be avoided.
  - If a leak is suspected, all naked flames shall be removed/ extinguished.
  - If a leakage of refrigerant is found which requires brazing, all of the refrigerant shall be recovered from the system, or isolated (by means of shut off valves) in a part of the system remote from the leak. Oxygen free nitrogen (OFN) shall then be purged through the system both before and during the brazing process.
- **Removal and evacuation**
  - The refrigerant charge shall be recovered into the correct recovery cylinders and the system shall be "flushed" with OFN to render the unit safe. This process may need to be repeated several times.
  - Compressed air or oxygen shall not be used for purging refrigerant systems.
  - Flushing shall be achieved by breaking the vacuum in the system with OFN and continuing to fill until the working pressure is achieved, then venting to atmosphere, and finally pulling down to a vacuum. This process shall be repeated until no refrigerant is within the system. When the final OFN charge is used, the system shall be vented down to atmospheric pressure to enable work to take place. This operation is absolutely vital if brazing operations on the pipe-work are to take place.
  - The outlet for the vacuum pump is not close to any ignition sources and that ventilation is available.

- **Charging procedures**
  - Ensure that contamination of different refrigerants does not occur when using charging equipment. Hoses or lines shall be as short as possible to minimise the amount of refrigerant contained in them.
  - Cylinders shall be kept upright.
  - Ensure that the refrigeration system is earthed prior to charging the system with refrigerant.
  - Label the system when charging is complete (if not already).
  - Extreme care shall be taken not to overfill the refrigeration system.
  - Prior to recharging the system, it shall be pressure-tested with the appropriate purging gas. The system shall be leak-tested on completion of charging but prior to commissioning. A follow up leak test shall be carried out prior to leaving the site.
- **Decommissioning**
  - Before carrying out this procedure, it is essential that the technician is completely familiar with the equipment and all its detail.
  - Prior to the task being carried out, an oil and refrigerant sample shall be taken in case analysis is required prior to re-use of reclaimed refrigerant.
  - Electrical power must be available before the task is commenced.
  - Become familiar with the equipment and its operation.
  - Isolate system electrically.
  - Before attempting the procedure, ensure that:

    (1) mechanical handling equipment is available, if required, for handling refrigerant cylinders;

    (2) all personal protective equipment is available and being used correctly;

    (3) the recovery process is supervised at all times by a competent person;

    (4) recovery equipment and cylinders conform to the appropriate standards.
  - Pump down refrigerant system, if possible.
  - If a vacuum is not possible, make a manifold so that refrigerant can be removed from various parts of the system.
  - Make sure that cylinder is situated on the scales before recovery takes place.
  - Start the recovery machine and operate in accordance with manufacturer's instructions.
  - Do not overfill cylinders. (No more than 80 % volume liquid charge).
  - Do not exceed the maximum working pressure of the cylinder, even temporarily.
  - When the cylinders have been filled correctly and the process completed, make sure that the cylinders and the equipment are removed from site promptly and all isolation valves on the equipment are closed off.
  - Recovered refrigerant shall not be charged into another refrigeration system unless it has been cleaned and checked.
- **Labelling**
  - Equipment shall be labelled stating that it has been de-commissioned and emptied of refrigerant. The label shall be dated and signed.
  - Ensure that there are labels on the equipment stating the equipment contains flammable refrigerant.
- **Recovery**
  - When transferring refrigerant into cylinders, ensure that only appropriate refrigerant recovery cylinders are employed.
  - Ensure that the correct number of cylinders for holding the total system charge are available. All cylinders to be used are designated for the recovered refrigerant and labelled for that refrigerant (i.e. special cylinders for the recovery of refrigerant).
  - Cylinders shall be complete with pressure-relief valve and associated shut-off valves in good working order. Empty recovery cylinders are evacuated and, if possible, cooled before recovery occurs.
  - The recovery equipment shall be in good working order with a set of instructions concerning the equipment that is at hand and shall be suitable for the recovery of all appropriate refrigerants.
  - A set of calibrated weighing scales shall be available and in good working order. Hoses shall be complete with leak-free disconnect couplings and in good condition. Before using the recovery machine, check that it is in satisfactory working order, has been properly maintained and that any associated electrical components are sealed to prevent ignition in the event of a refrigerant release.
  - The recovered refrigerant shall be returned to the refrigerant supplier in the correct recovery cylinder, and the relevant waste transfer note arranged.
  - Do not mix refrigerants in recovery units and especially not in cylinders.
  - If compressors or compressor oils are to be removed, ensure that they have been evacuated to an acceptable level to make certain that flammable refrigerant does not remain within the lubricant.
  - The evacuation process shall be carried out prior to returning the compressor to the suppliers.
  - Only electric heating to the compressor body shall be employed to accelerate this process.
  - When oil is drained from a system, it shall be carried out safely.

2 SAFETY

2.1 APPLIED SYMBOLS

- During normal heat pump system design work or unit installation, greater attention must be paid in certain situations requiring particular care in order to avoid damage to the unit, the installation or the building or property.
- Situations that pose a risk to the safety of those in the surrounding area or to the unit itself are clearly indicated in this manual.
- A series of special symbols are used to clearly identify these situations.
- Pay close attention to these symbols and to the messages following them, as your safety and that of others depends on it.

DANGER

- ***The text following this symbol contains information and instructions relating directly to your safety.***
- ***Not taking these instructions into account could lead to serious, very serious or even fatal injuries to you and others.***

CAUTION

- *The text following this symbol contains information and instructions relating directly to your safety.*
- *Not taking these instructions into account could lead to minor injuries to you and others.*
- *Not taking these instructions into account could lead to unit damage.*

NOTE

- *The text following this symbol contains information and instructions that may be use or that require a more thorough explanation.*
- *Instructions regarding inspections to be made on unit parts or systems may also be included.*

Caution, risk of fire!

This appliance is filled with R32, an odourless low burning velocity refrigerant. If the refrigerant is leaked, there is a possibility of ignition if it enters in contact with an external ignitions source.

DANGER

This symbol shows that this equipment uses a low burning velocity refrigerant. If the refrigerant is leaked, there is a possibility of ignition if it enters in contact with an external ignition source.

RISK OF EXPLOSION

The compressor must be stopped before removing the refrigerant pipes.

All service valves must be fully closed after pumping down operation.

Symbol	Explanation
	Before installation, read the installation and operation manual, and the wiring instruction sheet.
	Before performing maintenance and service tasks, read the service manual.
	For more information, see the Technical, Installation and Service Handbook.

2.2 ADDITIONAL INFORMATION

DANGER

- ***Do not pour water into the unit. These products are equipped with electrical parts. If the electrical components are in contact with water, a serious electrical shock will take place.***
- ***Do not touch or adjust safety devices inside the unit. If these devices are touched or adjusted, a serious accident can take place.***
- ***Do not open the service cover or access inside the unit without disconnecting the main power supply.***
- ***In case of fire Turn OFF the main switch, put out the fire at once and contact your service contractor.***
- ***Disconnect the appliance from its power source during service and when replacing parts.***
- ***It must be ensured that the heat pump cannot operate accidentally without water neither with air inside hydraulic system.***
- ***Check that the earth wire is securely connected. If the unit is not properly earthed, it may lead to electric shock. Do not connect the earth wire to gas piping, water piping, lighting conductor or earth wire of a telephone.***
- ***Fix the cables securely. External forces on the terminals could lead to a fire.***
- ***Use an ELB (earth leakage breaker, with an actuation time of 0.1s or less). In the event of a fault, there is danger of an electric shock or a fire if it is not used.***
- ***Do not charge oxygen, acetylene or other flammable and poisonous gases into the refrigerant cycle when performing a leakage test or an air-tightness test. These types of gases are extremely dangerous and can cause an explosion.***
- ***Do not install the unit in the following places, otherwise, it may lead to a fire, deformation, corrosion or failure.***
  - *Places where oil (including machinery oil) splashes.*
  - *Places where flammable gas may generate or flow.*
  - *Places where there is splashing water.*
  - *Places where sulfide gas drifts such as in hot spring.*
  - *Places where strong wind with high salinity blows such as coast regions, or places with an atmosphere of acidity or alkalinity.*
- ***Do not install the unit in the place where silicon gas drifts. If the silicon gas attaches to the surface of heat exchanger, the fin surface repels water. As a result, drain water splashes outside of the drain pan and splashed water runs inside of electrical box. In the end, water leakage or electrical devices failure may occur.***

- ***Means for disconnection from the supply mains, which have a contact separation in all poles that provide full disconnection under overvoltage category III conditions, must be incorporated in the fixed wiring in accordance with the wiring rules.***
- ***The appliance shall be installed in accordance with national wiring regulations.***
- ***The installation and service of this product shall be carried out by professional personnel, who have been trained and certified by national training organizations that are accredited to teach the relevant national competency standards that may be set in legislation.***
- ***Mechanical connectors used indoors shall comply with ISO 14903. When mechanical connectors are reused indoors, sealing parts shall be renewed. When flared joints are reused indoors, the flare part shall be re-fabricated.***
- ***Reusable mechanical connectors and flared joints are not allowed indoors.***
- ***Disconnect the appliance from its power source during service and when replacing parts.***

⚠ CAUTION

- *Do not use any sprays such as insecticide, lacquer, hair spray or other flammable gases within approximately 1 meter from the system.*
- *If circuit breaker or fuse is often activated, stop the system and contact your service contractor.*
- *Do not make service or inspections tasks by yourself. This work must be performed by qualified service person.*
- *Do not put any foreign material (sticks, etc...) inside the units. These units have high speed rotating fans and it is dangerous when any object touches them.*
- *Refrigerant leakage can cause difficulty with breathing due to insufficient air.*
- *Installation and service engineering must comply with local standards, laws and regulations. The standards (British Standard, BS4434) may be applicable if local regulations are not available.*
- *This air to water heat pump has been designed for standard water heating for human beings only. Do not use this for other functions that are not included in the wired controller.*
- *Do not install the unit in the place where the breeze directly catches the animals and plants. It could adversely affect the animals and plants.*
- *Pay attention to the following points when the unit is installed in hospital or other facilities where there are strong electromagnetic waves from medical equipment.*
  - *Do not install the unit where the electromagnetic wave is directly radiated to the electrical box, wiring, wired controller and adapter.*
  - *At least 3 meters from strong electromagnetic wave radiators, such as radio equipment.*
- *If the supply cord is damaged, it must be replaced by the manufacturer, its service agent or similarly qualified persons in order to avoid a hazard.*
- *This appliance can be used by children aged from 8 years and above and persons with reduced physical, sensory or mental capabilities or lack of experience and knowledge if they have been given supervision or instruction concerning use of the appliance in a safe way and understand the hazards involved. Children shall not play with the appliance. Cleaning and user maintenance shall not be made by children without supervision.*

NOTE

- *It is recommended to ventilate the room every 3 or 4 hours.*
- *The air conditioner may not work properly in the following cases.*
  - *The power supplied by the power transformer is less than or equal to the electric power of the air conditioner.*
  - *The large power-consuming equipment is too close to the power supply wiring of the air conditioner,large surge voltage may be inducted in the power supply wiring of the air conditioner.*

CONTENT

1. General information **1**
1.1 General information 1
1.2 Summary of operations 3
2. General data **4**
2.1 Key Parameter 4
2.2 ERP performance data for space heating 8
2.3 Cooling mode application (EN 14825) 10
2.4 Component data 11
2.5 Electrical data 15
2.6 Safety and control Device 16
3. Capacity and selection data **18**
3.1 Hi-Therma Split 18
3.2 Hi-Therma Monobloc 23
3.3 Correction factors 26
4. Acoustic characteristic curves **27**
4.1 Considerations 27
4.2 Sound pressure level 28
5. Working range **29**
5.1 Power supply working range 29
5.2 Temperature working range 29
5.3 Hydraulic working range 32
6. General dimensions **34**
6.1 Hi-Therma Split Indoor Unit 34
6.2 Hi-Therma Split Outdoor Unit 36
6.3 Hi-Therma Monobloc 38
7. Refrigerant cycle and hydraulic circuit **40**
8. Installation **42**
8.1 Installation of Hi-Therma Split Indoor Unit 42
8.2 Installation of Hi-Therma Split Outdoor Unit 46
8.3 Calculation of Additional Refrigerant 49
9. Electrical and control settings **51**
9.1 General check 51
9.2 WIRING 52
9.3 TERMINAL BOARD CONNECTIONS 54
9.4 OPTIONAL INDOOR UNIT WIRING (ACCESSORIES) 56
9.5 SETTING OF DIP SWITCHES ON PCB1 62
10. Control function **64**
10.1 Basic function introduction 64
10.2 Space heating/cooling 74
10.3 DHW 94
10.4 Swimming pool 102
10.5 Auxiliary electric heater 103
10.6 Boiler combination 107
10.7 Solar combination 112
10.8 Water pump control 114
10.9 Optional functions 130
10.10 Input /Output /Auxiliary sensors 136
10.11 Test Run 144
11. Control configuration for OU **145**
11.1 Control Logic 145
11.2 Standard Operation Sequence 146
11.3 Function Setting 154

1. General information

1.1 General information

Hisense R32 Hi-Therma series units produce heating and domestic hot water like any oil or gas boiler, but transforming renewable energy from the outside air into heat. Air to water heat pumps extract the free energy present in the air, which is enough to heat a home up to a comfortable temperature, even on the coldest winter day. Every kW of electricity used to power the heat pump can yield up to more than 5.1kW of energy for heating; this provides savings of up to 80% on heating expenses compared to a traditional fossil fuel boiler.

The newest R32 Hi-Therma series, based on state-of-the-art technology, does not only achieve an outstanding performance in space heating and cooling but also provides domestic hot water with high efficiency.

The system is simple to control; its new user controller improves the acclaimed and successful design used with the existing LCD controller and provides a great deal of new functions.

1.1.1 Line-Up of Hi-Therma Split

It consists of one outdoor unit and one indoor unit. The outdoor unit extracts the heat present in the air, increases its refrigerant temperature and transmits it to the water circuit using the plate heat exchanger of the indoor unit, where the heat is taken to radiators (fan-coils), underfloor heating components or both (two circuit temperature area). The indoor unit is designed for space heating, in wall-mounted installation. It is convenient for new installations with low capacity requirements (Well insulated installations, high efficiency radiators...).

Outdoor Unit

Capacity	HP	2	2.5	3
	kW	4.4	6.0	8.0
Model		AHW-044HCDS1	AHW-060HCDS1	AHW-080HCDS1

Indoor Unit

Capacity	HP	2	2.5	3
	kW	4.4	6.0	8.0
Model		AHM-044HCDSAA	AHM-060HCDSAA	AHM-080HCDSAA

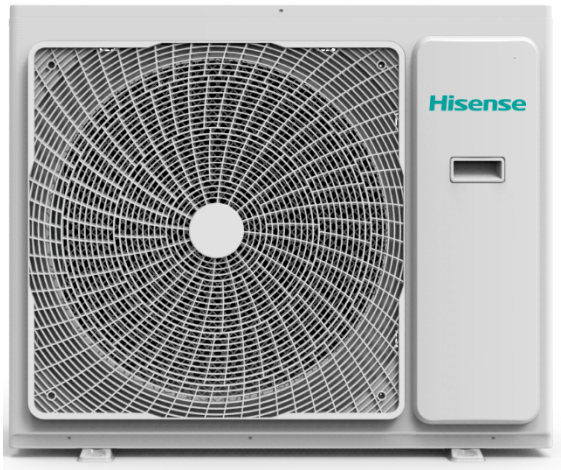

Model: AHW-044/060/080HCDS1

Model: AHM-044/060/080HCDSAA

1.1.2 Line-Up of Hi-Therma Monobloc

Hi-Therma Monobloc is a monobloc air to water heat pump system composed by only a special outdoor unit, which carries out the function of an air-to-water heat pump. This results in an excellent solution when installation space available is limited.

Hi-Therma Monobloc is designed to be installed outdoors, in any kind of dwelling (house, apartment, villa…), whether in a new construction or in an existing building. Installation work is greatly simplified thanks to the lack of refrigerant piping connections.

Capacity	HP	2	3
	kW	4.4	8.0
Model		AHZ-044HCDS1	AHZ-080HCDS1

1.2 Summary of operations

Space heating

Hi-Therma units are factory-supplied ready for space heating operation. Different heating installation configurations can be selected, providing a comfortable atmosphere all year long, even in the coldest climates: The air to water heat pump is sized to provide 100% of the heating requirements on the coldest day the year. For installations with an existing heating system by boiler and when is needed to heat the supplied water temperature to the circuit up to high temperatures (60ºC), the boiler can be configured to alternate with the air to water heat pump.

By selecting the different configuration types, it is possible to adapt the system to all customer requirements, providing a wide application range from the simplest configuration to complete configuration: Radiator, heating floor or both (two circuit temperature area).

Domestic hot water

Hi-Therma units give the option of domestic hot water production, allowing the user to benefit from the heat pump's high efficiency and achieve domestic hot water. An electric heater is incorporated inside both remote and integrated tanks in order to allow an immediate heating of the domestic hot water in accordance with the user's needs.

Space cooling

Hi-Therma units can also be operated in cooling operation. the reversible models become available. In this case, combination with fan-coils, refreshing floor or both (two circuit temperature area) can be applied.

Combination with solar panels

Hi-Therma units can be combined with solar panel. The solar combination enables to heat up the DHW by means of the sun. The solar combination is designed to transfer the heat from the solar panels (sun radiation) to the heat exchanger of DHW tank.

Swimming pool water heating operation

For summer session period, Hi-Therma units can be used to heat up the water temperature of swimming pools up to a value between 24 and 33ºC.

2. General data

2.1 Key Parameter

2.1.1 Hi-Therma Split

The heating capacity tables show the capacity and performance data in integrated values (with defrost correction factor included).

- The nominal heating and cooling capacities are based on the EN 14511 standard:
  Piping length: 7.5 meters; Piping lift: 0 meters.

Relevant EU standards and legislation: EN14825; EN50564; EN12102; (EU) No 811:2013; (EU) No 813:2013; OJ 2014/C 207/02:2014.

Keywords:

- COP: Coefficient of performance
- EER: Energy efficiency ratio
- DB: Dry bulb(°C); WB: Wet bulb (°C)

OAT: Outdoor ambient temperature

IWT: Inlet water temperature

OWT: Outlet water temperature

Model					44(2HP)	60(2.5HP)	80(3.0HP)
Outdoor Unit Type					AHW-044HCDS1	AHW-060HCDS1	AHW-080HCDS1
Power Supply					220-240V~50Hz		
Heating Operation	OAT (DB/WB)	IWT / OWT	-	Unit	Heating operation		
	7 / 6°C	30 / 35°C	Capacity (Min./Nom./Max.)	kW	1.85 / 4.40 /7.00	1.95 / 6.00 /8.90	2.10/ 8.00 / 11.0*1
			COP (Nom.)	-	5.10	5.00	4.90
		47 / 55°C	Capacity (Nom./Max.)	kW	4.40 / 6.00	6.00 / 7.50	8.00 / 9.00
			COP (Nom.)	-	3.00	3.05	2.80
	-7 / -8°C	30 / 35°C	Capacity (Nom./Max.)	kW	4.40 / 5.00	5.30 / 5.90	5.80 /7.30
			COP (Nom.)	-	3.26	3.16	3.14
		47 / 55°C	Capacity (Nom./Max.)	kW	4.00 / 4.20	4.70 / 5.00	5.00 / 6.40
			COP (Nom.)	-	1.97	2.04	1.94
Cooling Operation	35 / --°C	12 / 7 °C	Nominal Capacity	kW	4.40	5.00	6.00
			EER	-	3.90	3.70	3.60
		23 / 18 °C	Nominal Capacity	kW	5.60	6.00	7.00
			EER	-	5.60	5.60	5.10
Sound Pressure*2	Normal Mode (Heating/Cooling)			dB(A)	47/47	48/47	50/47
Sound Power	Normal Mode (Heating/Cooling)			dB(A)	61/61	62/62	64/64
Sound Pressure*2	Low Noise Mode (Heating/Cooling)			dB(A)	39/39	42/42	43/43
	night shift Mode (Heating/Cooling)			dB(A)	35/35	38/38	39/39
Outer Dimensions	Height			mm	750	750	750
	Width			mm	900	900	900
	Depth			mm	340	340	340
Packing Dimensions	Height			mm	807	807	807
	Width			mm	1022	1022	1022
	Depth			mm	445	445	445
Net Weight				kg	49.5	49.5	50.5
Gross Weight				kg	53.5	53.5	54.5
Refrigerating Installation	Compressor	Type		——	Rotary		
		Quantity		——	1	1	1
	Refrigeration Oil	Type		——	ACS-68R	ACS-68R	FW68S
		Charge		L	0.47	0.47	0.46
	Refrigeration Charge	Type		——	R32		
		Before Shipment		kg	1.23	1.23	1.26
	Refrigerent Flow Control			——	Mico-computer Control Expansion Valve		
	Heat Exchanger Type			——	Muti-way Cross-flow Finned Tube Type		
	Gas Pipe(Piping diameter)			mm	12.7	12.7	12.7
				in.	1/2	1/2	1/2
	Liquid Pipe(Piping diameter)			mm	6.35	6.35	6.35
				in.	1/4	1/4	1/4

Fan	Condenser Fan Quantity	——	1	1	1
	Air Flow Rate	m^3/h	2700	2700	2700
Minimum piping length		m	3		
Maximum chargeless piping length		m	10		
Maximum piping length		m	40	40	45(50*3)
Height difference between OU and IU (higher OU / lower OU)		m	30 / 20		
Working range (Heating)	Outdoor ambient temperature	°C (DB)	-25~35		
	Outlet water temperature	°C	15~60		
Working range (Cooling)	Outdoor ambient temperature	°C (DB)	5~46		
	Outlet water temperature	°C	5~22		
Working range (DHW)	Outdoor ambient temperature	°C (DB)	-25~40		
	Tank water temperature	°C	30~55(75*4)		

Model			44(2.0 HP)	60(2.5 HP)	80(3.0 HP)
Indoor Unit Type			AHM-044HCDSAA	AHM-060HCDSAA	AHM-080HCDSAA
Power Supply			220-240V~50Hz		
Nominal water flow	IWT: 30 °C / OWT: 35 °C ΔT: 5 °C	m^3/h	0.77	1.03	1.38
Outer Dimensions (with connections)	Height	mm	890	890	890
	Width	mm	520	520	520
	Depth	mm	320	320	320
Packing Dimensions	Height	mm	419	419	419
	Width	mm	1160	1160	1160
	Depth	mm	650	650	650
Net Weight		kg	43.5	43.5	44.5
Gross Weight		kg	48.5	48.5	49.5
Refrigerating Installation	Connection type	-	Flare nut connection		
	Liquid pipe (Piping diameter)	mm (in.)	Ø9.53 (3/8”)		
	Gas pipe (Piping diameter)	mm (in.)	Ø15.88 (5/8”)		
Space heating pipes connection	Connection type	-	Screwed connection		
	Shutdown valves	mm (in.)	G 1” (male) - G 1” (male)		
	Inlet pipe diameter	mm (in.)	G 1” (female)		
	Outlet pipe diameter	mm (in.)	G 1” (female)		
Noise level (sound pressure)		dB(A)	28	28	28
Noise level (sound power)		dB(A)	42	42	42

Note:

* 1. This value is an instantaneous value.
* 2. The above noise values are measured in the anechoic chamber without reflected echo, therefore the impact of the reflected echo must be taken into consideration at the scene.
* 3. The ambient temperature of the outdoor unit shall be ≥10°C, and the refrigerant charge of the unit shall be less than the maximum refrigerant charge allowed by the unit.
* 4. When there is an DHW electric heater mounted in the DHW tank ,the setting temperature can reach 75°C.

2.1.2 Hi-Therma Monobloc

The heating capacity tables show the capacity and performance data in integrated values (with defrost correction factor included).

Keywords:

- COP: Coefficient of performance
- EER: Energy efficiency ratio
- DB: Dry bulb(°C); WB: Wet bulb (°C)

OAT: Outdoor ambient temperature

IWT: Inlet water temperature

OWT: Outlet water temperature

HP					2	3
Outdoor Unit Type					AHZ-044HCDS1	AHZ-080HCDS1
Power Supply					220-240V~50Hz	
Heating Operation	OAT (DB/WB)	IWT / OWT	-	Unit	Heating operation	
	7 / 6 °C	30 / 35 °C	Capacity (Min./Nom./Max.)	kW	1.85 / 4.40 /6.50	2.10/ 8.00 / 11.0*1
			COP (Nom.)	-	5.10	4.90
		47 / 55 °C	Capacity (Nom./Max.)	kW	4.40 / 6.00	8.00 / 9.00
			COP (Nom.)	-	3.00	2.80
	-7 / -8 °C	30 / 35 °C	Capacity (Nom./Max.)	kW	4.00 / 5.00	5.80 / 7.30
			COP (Nom.)	-	3.26	3.14
		47 / 55 °C	Capacity (Nom./Max.)	kW	4.00 / 4.20	5.00 / 6.40
			COP (Nom.)	-	1.97	1.94
Cooling Operation	35 / -- °C	12 / 7 °C	Nominal Capacity	kW	4.40	6.50
			EER	-	4.00	3.35
		23 / 18 °C	Nominal Capacity	kW	5.60	7.00
			EER	-	5.60	5.10
Sound Pressure*2	Normal Mode (Heating/Cooling)			dB(A)	47/47	50/47
Sound Power	Normal Mode (Heating/Cooling)			dB(A)	61/61	64/61
Sound Pressure*2	Low Noise Mode (Heating/Cooling)			dB(A)	40/40	43/43
	night shift Mode (Heating/Cooling)			dB(A)	36/36	39/39
Outer Dimensions	Height			mm	815	815
	Width			mm	1270	1270
	Depth			mm	340	340
Packing Dimensions	Height			mm	890	890
	Width			mm	1400	1400
	Depth			mm	440	440
Net Weight				kg	88	88
Gross Weight				kg	102	102
Refrigerating Installation	Compressor	Type		——	Rotary	
		Quantity		——	1	1
	Refrigeration Oil	Type		——	ACS-68R	FW68S
		Charge		L	0.47	0.46
	Refrigeration Charge	Type		——	R32	
		Before Shipment		kg	1.17	1.21
	Refrigerent Flow Control			——	Mico-computer Control Expansion Valve	
	Heat Exchanger Type			——	Muti-way Cross-flow Finned Tube Type	
	Gas Pipe(Piping diameter)			mm	——	——
				in.	——	——
	Liquid Pipe(Piping diameter)			mm	——	——
				in.	——	——

Fan	Condenser Fan Quantity	——	1	1
	Air Flow Rate	m3/h	2700	2700
Minimum piping length		m	——	——
Maximum chargeless piping length		m	——	——
Maximum piping length		m	——	——
Height difference between OU and IU (higher OU / lower OU)		m	——	——
Working range (Heating)	Outdoor ambient temperature	°C (DB)	-25~35	
	Outlet water temperature	°C	15~60	
Working range (Cooling)	Outdoor ambient temperature	°C (DB)	5~48	
	Outlet water temperature	°C	5~27	
Working range (DHW)	Outdoor ambient temperature	°C (DB)	-25~40	
	Tank water temperature	°C	15~75*3	
Nominal water flow	IWT: 30 °C / OWT: 35 °C ΔT: 5 °C	m3/h	0.77	1.29
Space heating pipes connection	Connection type	-	Screwed connection	
	Shutdown valves	mm (in.)	G 1” (male) - G 1” (male)	
	Inlet pipe diameter	mm (in.)	G 1” (female)	
	Outlet pipe diameter	mm (in.)	G 1” (female)	

Note：
* 1. This value is an instantaneous value.
* 2. The above noise values are measured in the anechoic chamber without reflected echo, therefore the impact of the reflected echo must be taken into consideration at the scene.
* 3. When there is an DHW electric heater mounted in the DHW tank, the setting temperature can reach 75°C.

2.2 ERP performance data for space heating

This appliance must be installed, maintained and dismantled by professionals. Do not pour contained refrigerant into the atmosphere since this refrigerant fluid is a fluorinated greenhouse gas regulated under European Regulation (EU)Nº 517/2014.

2.2.1 ERP data - Hi-Therma Split

Model			44 (2.0 HP)		60 (2.5 HP)		80 (3.0 HP)	
	Outdoor unit		AHW-044HCDS1		AHW-060HCDS1		AHW-080HCDS1	
	Indoor unit		AHM-044HCDSAA		AHM-060HCDSAA		AHM-080HCDSAA	
Water outlet temperature			35°C	55°C	35°C	55°C	35°C	55°C
Product description	Air to water heat pump	-	Yes					
	Heat pump combination heater	-	No					
	Low temperature heat pump	-	No					
	Complementary heater	-	Yes					
	Outdoor side heat exchanger of chiller	-	Air to Water					
	Indoor side heat exchanger chiller	-	Water					
	Type	-	Compressor driven vapour compression					
	Driver of compressor	-	Electric motor					
	Capacity Control		Variable					
	Water control		Variable					
Rated heating capacity (Prated,h)		kW	4.44	3.87	6.10	5.37	6.54	5.88
Seasonal space heating energy efficiency (ηs,h)		%	197	126	194	130	194	134
Seasonal energy efficiency ratio heating mode(SCOP)		-	5.00	3.23	4.93	3.33	4.92	3.42
Type of energy used		-	Electricity					
Declared capacity (Pdh) and coefficient of performance (COP) at partial load under the following outdoor temperatures:								
Outdoor temperature (Tj) = -7°C	Pdh	kW	3.9	3.4	5.4	4.7	5.8	5.2
	COPd	-	3.29	1.97	3.13	2.04	3.14	1.85
Outdoor temperature (Tj) = +2°C	Pdh	kW	2.4	2.1	3.3	3.0	3.5	3.2
	COPd	-	4.80	3.22	4.67	3.21	4.84	3.40
Outdoor temperature (Tj) = +7°C	Pdh	kW	1.7	1.4	2.0	2.0	2.3	2.1
	COPd	-	6.44	3.97	6.63	4.34	5.98	4.50
Outdoor temperature (Tj) = +12°C	Pdh	kW	2.2	2.0	2.2	2.0	2.0	2.1
	COPd	-	9.92	7.24	9.92	7.24	9.67	7.71
Outdoor temperature (Tj) = Bivalent temperature (Tbiv)	Pdh	kW	3.9	3.4	5.4	4.7	5.8	5.2
	COPd	-	3.29	1.97	3.13	2.04	3.14	1.85
Outdoor temperature (Tj) = Limit operation temperature (TOL)	Pdh	kW	4.3	3.5	5.3	4.5	6.2	5.7
	COPd	-	2.62	1.68	2.66	1.75	2.66	1.54
Bivalent temperature (Tbiv)		°C	-7	-7	-7	-7	-7	-7
Limit operation temperature (TOL)		°C	-10	-10	-10	-10	-10	-10
Water limit operation temperature		°C	55	55	55	55	55	55
Degradation coefficient (Cdh)		-	0.9	0.9	0.9	0.9	0.9	0.9
Supplementary capacity (PSUP)		kW	0.102	0.303	0.729	0.805	0.343	0.179
Annual energy consumption (QHE)		kW·h	1824	2457	3536	3312	2732	3536

2.2.2 ERP data - Hi-Therma Monobloc

Model			44 (2.0 HP)		80 (3.0 HP)	
	Outdoor unit		AHZ-044HCDS1		AHZ-080HCDS1	
Water outlet temperature			35°C	55°C	35°C	55°C
Product description	Air to water heat pump	-	Yes			
	Heat pump combination heater	-	No			
	Low temperature heat pump	-	No			
	Complementary heater	-	No			
	Outdoor side heat exchanger of chiller	-	Air to Water			
	Indoor side heat exchanger chiller	-	Water			
	Type	-	Compressor driven vapour compression			
	Driver of compressor	-	Electric motor			
	Capacity Control		Variable			
	Water control		Variable			
Rated heating capacity (Prated,h)		kW	4.61	4.10	6.74	6.13
Seasonal space heating energy efficiency (ηs,h)		%	204	136	202	142
Seasonal energy efficiency ratio heating mode(SCOP)		-	5.17	3.47	5.12	3.62
Type of energy used		-	Electricity			
Declared capacity (Pdh) and coefficient of performance (COP) at partial load under the following outdoor temperatures:						
Outdoor temperature (Tj) = -7°C	Pdh	kW	4.05	3.60	5.93	5.40
	COPd	-	3.26	2.08	3.10	2.12
Outdoor temperature (Tj) = +2°C	Pdh	kW	2.48	2.26	3.58	3.29
	COPd	-	5.02	3.44	5.01	3.64
Outdoor temperature (Tj) = +7°C	Pdh	kW	1.67	1.49	2.37	2.13
	COPd	-	6.70	4.33	6.62	4.53
Outdoor temperature (Tj) = +12°C	Pdh	kW	1.14	1.02	1.43	1.29
	COPd	-	8.74	6.66	9.17	6.47
Outdoor temperature (Tj) = Bivalent temperature (Tbiv)	Pdh	kW	4.05	3.60	5.93	5.40
	COPd	-	3.26	2.08	3.10	2.12
Outdoor temperature (Tj) = Limit operation temperature (TOL)	Pdh	kW	4.56	3.59	6.31	5.93
	COPd	-	2.68	1.77	2.74	1.73
Bivalent temperature (Tbiv)		°C	-7	-7	-7	-7
Limit operation temperature (TOL)		°C	-10	-10	-10	-10
Water limit operation temperature		°C	55	55	55	55
Degradation coefficient (Cdh)		-	0.9	0.9	0.9	0.9
Supplementary capacity (PSUP)		kW	0.022	0.483	0.389	0.172
Annual energy consumption (QHE)		kW·h	1830	2425	2704	3481

2.3 Cooling mode application (EN 14825)

2.3.1 Cooling data- Hi-Therma Split

Model			44 (2.0 HP)		60 (2.5 HP)		80 (3.0 HP)	
	Outdoor unit		AHW-044HCDS1		AHW-060HCDS1		AHW-080HCDS1	
	Indoor unit		AHM-044HCDSAA		AHM-060HCDSAA		AHM-080HCDSAA	
Water outlet temperature			7°C	18°C	7°C	18°C	7°C	18°C
Product description	Outdoor side heat exchanger of chiller		Air to Water					
	Indoor side heat exchanger chiller		Water					
	Type		Compressor driven vapour compression					
	Driver of compressor		Electric motor					
	Capacity Control		Variable					
	Water control		Variable	Fixed	Variable	Fixed	Variable	Fixed
Rated Cooling Capacity (PRATED,C)		kW	4.40	5.60	5.0	6.00	6.0	7.0
Seasonal space cooling energy efficiency (ηS,C)		%	227	352	231	346	226	339
Seasonal energy efficiency ratio cooling mode (SEER)		-	5.75	8.87	5.85	8.73	5.73	8.54
Declared cooling capacity and efficiency ratio for part load at given outdoor temperatures Tj"								
Outdoor temperature (Tj) = 35°C	Pdc	kW	4.4	5.6	5.0	6.0	6.0	7.0
	EERd	-	3.90	5.60	3.70	5.60	3.60	5.20
Outdoor temperature (Tj) = 30°C	Pdc	kW	3.3	4.2	3.7	4.4	4.4	5.1
	EERd	-	4.98	7.36	5.00	7.01	5.10	6.81
Outdoor temperature (Tj) = 25°C	Pdc	kW	2.2	2.6	2.5	2.9	2.8	3.2
	EERd	-	6.36	10.81	6.59	10.51	6.56	8.87
Outdoor temperature (Tj) = 20°C	Pdc	kW	1.2	1.4	1.2	1.4	2.6	1.58
	EERd	-	8.28	12.27	8.28	12.27	7.93	9.93
Degradation coefficient (Cdc)		-	0.9	0.9	0.9	0.9	0.9	0.9

2.3.2 Cooling data- Hi-Therma Monobloc

Model			44(2.0 HP)		80(3.0 HP)	
	Outdoor unit		AHZ-044HCDS1		AHZ-080HCDS1	
Water outlet temperature			7ºC	18ºC	7ºC	18ºC
Product description	Outdoor side heat exchanger of chiller		Air to Water			
	Indoor side heat exchanger chiller		Water			
	Type		Compressor driven vapour compression			
	Driver of compressor		Electric motor			
	Capacity Control		Variable			
	Water control		Variable	Fixed	Variable	Fixed
Rated Cooling Capacity (PRATED,C)		kW	4.40	5.60	6.5	7.0
Seasonal space cooling energy efficiency (ηS,C)		%	227	399	230	292
Seasonal energy efficiency ratio cooling mode (SEER)		-	5.75	10.06	5.83	7.38
Declared cooling capacity and efficiency ratio for part						
Outdoor temperature (Tj) = 35ºC	Pdc	kW	4.57	5.89	6.52	6.63
	EERd	-	3.95	6.02	3.23	4.61
Outdoor temperature (Tj) = 30ºC	Pdc	kW	3.36	4.32	4.92	4.87
	EERd	-	5.43	8.40	5.00	5.55
Outdoor temperature (Tj) = 25ºC	Pdc	kW	2.02	2.74	3.18	3.28
	EERd	-	7.47	12.72	6.87	9.00
Outdoor temperature (Tj) = 20ºC	Pdc	kW	0.89	1.14	1.37	1.58
	EERd	-	5.30	12.61	7.35	9.93
Degradation coefficient (Cdc)		-	0.9	0.9	0.9	0.9

2.4 Component data

2.4.1 Hi-Therma Split

MODEL				44 (2.0HP)	60 (2.5HP)	80 (3.0HP)
Heat Exchanger	Heat exchanger Type		-	Multi-way cross-flow finned tube type		
	Tube	Material	-	Copper		
		Outer diameter	mm	7		
		Rows	-	2		
	Number of tubes in the heat exchanger		-	44		
	Fin	Material	-	Aluminium		
		Pitch	mm	1.40		
	Max. operating pressure		MPa	4.15		
	Max. frontal area		m^2	0.68		
	Number of heat exchanger per unit		-	1		
Fan Part	Fan	Type	-	Axial flow fan		
		Quantity	-	1		
		Outer diameter	mm	556		
		Rotating speed	rpm	900		900
	Fan Motor	Model	-	ZWB278D04A	ZWB278D04A	ZWB278D04A
		Type	-	Waterproof brushless DC motor		
		Start-up mode	-	Soft driving		
		Nominal output power	W	100		
		Quantity	-	1		
		Insulation grade	-	E		
		Degree of Protection	-			
Compressor Part	Design pressure	High Side	MPa	4.15	4.15	4.15
		Low Side	MPa	2.21	2.21	2.21
	Compressor Motor	Model	-	WHP06840GUKQA8JT6	WHP06840GUKQA8JT6	SVB200FCNMC-L
		Start-up mode	-	VFD	VFD	VFD
		Polarities	-	6	6	6
		Quantity	-	1	1	1
		Insulation grade	-	E	E	E
	Refrigerator Oil	Brand	-	ACS68R	ACS68R	FW68S
		Volume	L	0.47	0.47	0.46

Model				44 (2.0HP)	60 (2.5HP)	80 (3.0HP)
Water heat exchanger	Type		-	Brazed plate		
	Material		-	Stainless steel		
	Transfer fluids		-	R32 - H_2O		
	Quantity		-	1		
	Internal refrigerant volume		L	0.53	0.53	0.72
	Internal water volume		L	0.54	0.54	0.72
	Insulation material		-	EPS		
Water pump	Model		-	PARA RS15/7.0		
	Type		-	Inverter		
	Control		-	PWM		
	Power supply		-	1~ 230V 50Hz		
	Maximum lift pressure		mwp	7.6		
	Maximum water flow		m^3/h	3.5		
	Maximum power input		W	50		
	Piping	Water inlet	inches	G 1”		
		Water outlet	inches	G 1”		
		Inlet/outlet distance	mm	130		
Water electric heater	Material		-	AISI 316L (Stainless steel)		
	Power supply		-	1~ 230V 50Hz		
	Maximum electric heater power		kW	3.0		
	Regulated electric heater power (step 1/ step 2/ step 3)		kW	1.0/2.0/3.0		
	Automatic Reset Thermostat		-	Yes (Cut-out: 75°C±4°C)		
	Temperature fuse		-	$94°C^{+0}_{-10}$ °C		
Water pressure sensor	Material		-	AISI 304L(Stainless steel)		
	Pressure range		-	0-9.0Bar		
Expansion vessel	Material		-	Steel (with stainless/galvanized steel connections)		
	Internal water volume		L	8.0		
	Working pressure		bar	3.0		
	Pre-loading pressure (Air side)		bar	1.0±0.3		
Shut-off valve with filter	Type		-	Shut-off valve with filter		
	Material		-	Brass		
	Piping connection		inches	1”, DN25		
	Mesh		in.	30.0		
	Self-cleaning (with back flush) filter		-	Yes		
Safety valve			-	Yes (3 bar)		
Shut-off valve			-	Yes (2 factory-supplied valves)		
Air purger			-	Yes		
Unit controller			-	Yes		

2.4.2 Hi-Therma Monobloc

Outdoor Part	MODEL				AHZ-044HCDS1	AHZ-080HCDS1
	Heat Exchanger	Heat exchanger Type		-	Multi-way cross-flow finned tube type	
		Tube	Material	-	Copper	
			Outer diameter	mm	7	
			Rows	-	2	
		Number of tubes in the heat exchanger		-	44	
		Fin	Material	-	Aluminium	
			Pitch	mm	1.40	
		Max. operating pressure		MPa	4.15	
		Max. frontal area		m^2	0.68	
		Number of heat exchanger per unit		-	1	
	Fan Part	Fan	Type	-	Axial flow fan	
			Quantity	-	1	
			Outer diameter	mm	556	
			Rotating speed	rpm	900	900
		Fan Motor	Model	-	ZWB278D04A	ZWB278D04A
			Type	-	Waterproof brushless DC motor	
			Start-up mode	-	Soft driving	
			Nominal output power	W	100	
			Quantity	-	1	
			Insulation grade	-	E	
			Degree of Protection	-		
	Compressor Part	Design pressure	High Side	MPa	4.15	4.15
			Low Side	MPa	2.21	2.21
		Compressor Motor	Model	-	WHP06840GUKQA8JT6	SVB200FCNMC-L
			Start-up mode	-	VFD	VFD
			Polarities	-	6	6
			Quantity	-	1	1
			Insulation grade	-	E	E
		Refrigerator Oil	Brand	-	ACS68R	FW68S
			Volume	L	0.47	0.46

	MODEL				AHZ-044HCDS1	AHZ-080HCDS1
Indoor Part	Water heat exchanger	Type		-	Brazed plate	
		Material		-	Stainless steel	
		Transfer fluids		-	R32 - H 2O	
		Quantity		-	1	
		Internal refrigerant volume		L	0.53	0.72
		Internal water volume		L	0.54	0.72
		Insulation material		-	EPS	
	Water pump	Model		-	Para 25-130/9-87/IPWM1-3	
		Type		-	Inverter	
		Control		-	PWM	
		Power supply		-	1~ 230V 50Hz	
		Maximum lift pressure		mwp	9.0	
		Maximum water flow		m^3/h	4.5	
		Maximum power input		W	87	
		Piping	Water inlet	inches	G 1”	
			Water outlet	inches	G 1”	
			Inlet/outlet distance	mm	130	
	Water electric heater	Material		-	——	
		Power supply		-	——	
		Maximum electric heater power		kW	——	
		Regulated electric heater power (step 1/ step 2/ step 3)		kW	——	
		Capillary thermostat		-	——	
		Surface thermostat		-	——	
	Water pressure sensor	Material			AISI 304L(Stainless steel)	
		Pressure range			0-3.0Bar	
	Expansion vessel	Material		-	Steel (with stainless/galvanized steel connections)	
		Internal water volume		L	8.0	
		Working pressure		bar	3.0	
		Pre-loading pressure (Air side)		bar	1.0±0.3	
	Shut-off valve with filter	Type		-	Isolated water strainer (Filter ball)	
		Material		-	Brass	
		Piping connection		inches	1”, DN25	
		Mesh (hole size)		cm	30.0	
		Self-cleaning (with back flush) filter		-	Yes	
	Safety valve			-	Yes (3 bar)	
	Shut-off valve			-	Yes (2 factory-supplied valves)	
	Air purger			-	Yes	
	Unit controller			-	Yes	

2.5 Electrical data

Keywords:

U: Power supply.
PH: Phase.
IPT: Total input power.
STC: Starting current: Less than maximum current.
RNC: Running current.
MC: Maximum current.

2.5.1 Hi-Therma Split

Outdoor unit

Model	Power supply	Applicable voltage		Compressor and fan motors		MC (A)	Max. IPT (kW)
				Cooling	Heating		
		U max. (V)	U min. (V)	IPT (KW)	IPT (KW)		
AHW-044HCDS1	220-240V ~ 50Hz	264	198	1.13	0.86	9.8	2.23
AHW-060HCDS1				1.35	1.20	12.0	2.73
AHW-080HCDS1				1.67	1.63	16.8	3.75

Indoor unit

Model	Power supply	Applicable voltage		Operation mode	MC (A)	Max. IPT (kW)
		U max. (V)	U min. (V)			
AHM-044/060/080HCDSAA	220-240V ~ 50Hz	264	198	Without DHW electric heaters	16.0	3.10
				With DHW electric heaters	31.0	6.10

2.5.2 Hi-Therma Monobloc

Power supply for unit (TB1 terminal)

Model	Power supply	Operation mode	Power supply cables EN60335-1	Transmitting cables EN60335-1	CB (A)	ELB (nº of poles/A/mA)
AHZ-044HCDS1	220-240V ~50Hz	—	3 x 2.5 mm²	2 x 0.75 mm²	16	2/16/30
		With DHW tank heater	3 x 4.0 mm²		32	2/32/30
AHZ-080HCDS1		—	3 x 4.0 mm²		20	2/20/30
		With DHW tank heater	3 x 6.0 mm²		40	2/40/30

Power supply for auxiliary electric heater (TB5 terminal)

Model	Power supply	Operation mode	Power supply cables EN60335-1	Transmitting cables EN60335-1	CB (A)	ELB (nº of poles/A/mA)
AHZ-044HCDS1	220-240V ~50Hz	With auxiliary electric heater	3 x 2.5 mm²	2 x 0.75 mm²	20	2/20/30
AHZ-080HCDS1		With auxiliary electric heater	3 x 2.5 mm²		20	

CB: Air circuit breaker; ELB: Electric leakage breaker.

NOTE

Heating conditions: Inlet/outlet water temperature: 30/35 °C; Outdoor ambient temperature (DB/WB): 7/6 °C.
The compressor data shown in the tables below are based on a combined capacity of 100% of the power supplied.
The “Maximum current” shown in the above table is the maximum total unit running current at the following conditions:
Supply voltage: 90% of the rated voltage.
Unit capacity: 100% at maximum operating conditions.
The power supply cables must be sized to cover this maximum current value.
Specifications in these tables are subject to change without notice in order that Hisense may bring the latest innovations to their customers.

2.6 Safety and control Device

Compressor protection

The compressor is protected by the following devices and their combinations.

(1) High pressure switch: This switch cuts out the operation of the compressor when the discharge pressure exceeds the setting.

(2) Electromagnetic heating: This band heater protects against the oil carry-over during the cold starting, as the band heater is energized while the compressor is stopped.

2.6.1 Hi-Therma Split

Outdoor unit

MODEL				AHW-044/060/080HCDS1
For compressor	Pressure switches			Automatic reset, non-adjustable (Each one for each compressor)
	High	Cut-out	MPa	4.4±0.15
		Cut-in		3.40±0.2
	Low	Cut-out	MPa	0.05±0.03
		Cut-in		0.15±0.03
	Fuse capacity on PCB (PF1)	1~ 230V 50Hz	A	30
	CCP timer		-	Non adjustable
	Setting time		min	3

Indoor unit

MODEL			AHM-044/060/080HCDSAA
For electric heaters	Automatic Reset Thermostat		Cut-out: 75°C±4°C
	Temperature fuse		94°C$^{+0}_{-10}$ °C
	Fuse capacity		20
For water circulation	Water pressure sensor protection		0-9.0Bar
	Low water pressure	Condition 1	Pw<0.3Bar for 180 seconds
	High water pressure	Condition 1	Pw≥4.0Bar for 180 seconds
	Low water flow control		Water flow control by Water pump feedback (Reset manual by Alarm)
		Activation	44: 0.5m^3/h 60-80: 0.6m^3/h
	Water pump control		Water Pump status by feedback control
For water temperature	High temperature protection		+5°C of Maximum water temperature (Heating mode)
	Freeze temperature protection		-2°C of minimum water temperature (Cooling mode)
For refrigerant temperature	Freeze temperature protection		
		Condition 1	(Tl< -4°C and Tg<8°C) or (Tg≤1°C)for 240 seconds
		Condition 2	(Tl< -4°C and Tg<8°C) or (Tg≤1°C)for60 seconds
		Condition 3	Tl+Two≤4°C and Tl≤1 for 180 seconds
For the control circuit	Fuse capacity		10A (Inside PCB1, EFR1)

2.6.2 Hi-Therma Monobloc

MODEL				AHZ-044/080HCDS1
For compressor	Pressure switches			Automatic reset, non-adjustable (Each one for each compressor)
	High	Cut-out	MPa	4.4±0.15
		Cut-in		3.40±0.2
	Low	Cut-out	MPa	0.05±0.03
		Cut-in		0.15±0.03
	Fuse capacity on PCB6 (F201)	1~ 230V 50Hz	A	30
	CCP timer		-	Non adjustable
	Setting time		min	3

MODEL			AHZ-044/080HCDS1
For electric heater	Safety thermostat		——
	Fuse capacity		20
For water circulation	Low water pressure switch		Automatic Reset
	Low water pressure	Condition 1	Pw<0.3Bar for 180 seconds
	High water pressure	Condition 1	Pw≥4.0Bar for 180 seconds
	Low water flow control		Water flow control by Water pump feedback (Reset manual by Alarm)
		Activation	44: 0.5m^3/h 60-80: 0.6m^3/h
	Water pump control		Water Pump status by feedback control
For water temperature	High temperature protection		+5°C of Maximum water temperature (Heating mode)
	Freeze temperature protection		-2°C of minimum water temperature (Cooling mode)
For refrigerant temperature	Freeze temperature protection		
		Condition 1	(Tl<-4°C and Tg<8°C) or (Tg≤1°C)for 240 seconds
		Condition 2	(Tl<-4°C and Tg<8°C) or (Tg≤1°C)for60 seconds
		Condition 3	Tl+Two≤4°C and Tl≤1 for 180 seconds
For the control circuit	Fuse capacity		10A (Inside PCB1,EFR1)

3. Capacity and selection data

3.1 Hi-Therma Split

3.1.1 Maximum heating capacity table (kW) (Integrated)

		Ambient temperature (ºC DB)									
		-25		-20		-15		-10		-7	
	Water outlet temp (ºC)	CAP (kW)	IPT (kW)	CAP (kW)	IPT (kW)	CAP (kW)	IPT (kW)	CAP (kW)	IPT (kW)	CAP (kW)	IPT (kW)
AHW-044HCDS1 + AHM-044HCDSAA	60									3.64	2.35
	55							3.65	2.17	4.20	2.30
	50					3.84	2.14	4.23	2.12	4.34	2.25
	45	3.47	2.27	3.88	2.18	4.12	2.10	4.57	2.03	4.62	2.20
	40	3.80	2.23	4.02	2.14	4.25	2.05	4.78	1.95	4.90	2.11
	35	3.98	2.21	4.17	2.10	4.36	1.95	4.87	1.86	5.00	1.99
	30	4.09	2.17	4.36	2.04	4.65	1.91	5.15	1.76	5.25	1.86
	25	4.20	2.05	4.56	1.95	4.94	1.86	5.43	1.66	5.74	1.70
	20	4.31	1.91	4.75	1.86	5.23	1.82	5.71	1.56	5.95	1.56
AHW-060HCDS1 + AHM-060HCDSAA	60									4.14	2.88
	55							4.47	2.76	5.10	2.82
	50					4.46	2.60	4.86	2.62	5.34	2.74
	45	4.03	2.53	4.38	2.53	4.76	2.53	5.24	2.47	5.52	2.65
	40	4.16	2.45	4.57	2.45	5.02	2.45	5.46	2.39	5.79	2.56
	35	4.41	2.45	4.76	2.45	5.14	2.45	5.64	2.34	5.90	2.48
	30	4.60	2.40	5.00	2.40	5.43	2.40	5.83	2.23	6.05	2.31
	25	4.80	2.36	5.24	2.36	5.71	2.36	6.01	2.12	6.32	2.15
	20	5.00	2.27	5.47	2.27	5.81	2.27	6.20	2.05	6.59	2.08
AHW-080HCDS1 + AHM-080HCDSAA	60									5.10	3.81
	55							5.76	3.94	6.40	3.52
	50					5.34	3.55	6.00	3.32	6.49	3.24
	45	4.84	3.41	5.25	3.32	5.71	3.28	6.31	3.18	6.68	3.12
	40	5.13	3.38	5.64	3.29	6.20	3.20	6.76	3.11	7.09	3.06
	35	5.77	3.14	6.01	3.11	6.33	3.07	7.04	2.93	7.30	2.85
	30	6.00	3.12	6.26	3.07	6.53	3.01	7.24	2.87	7.66	2.80
	25	6.22	3.12	6.51	3.03	6.81	2.95	7.43	2.82	7.81	2.74
	20	6.44	3.10	6.76	2.99	7.09	2.89	7.63	2.77	7.95	2.69

		Ambient temperature (ºC DB)									
		-2		2		7		12		15	
	Water outlet temp (ºC)	CAP (kW)	IPT (kW)	CAP (kW)	IPT (kW)	CAP (kW)	IPT (kW)	CAP (kW)	IPT (kW)	CAP (kW)	IPT (kW)
AHW-044HCDS1 + AHM-044HCDSAA	60	3.92	2.31	4.39	2.31	5.38	2.20	5.92	1.93	6.10	1.78
	55	4.82	2.28	5.16	2.27	6.00	2.07	6.78	1.83	6.96	1.70
	50	5.22	2.16	5.55	2.08	6.62	1.99	7.16	1.73	7.38	1.63
	45	5.62	2.03	5.81	1.89	6.78	1.80	7.54	1.65	7.79	1.56
	40	5.73	1.89	5.99	1.72	6.89	1.61	7.81	1.50	8.06	1.44
	35	5.84	1.76	6.09	1.55	7.00	1.40	8.08	1.36	8.32	1.32
	30	6.13	1.67	6.32	1.52	7.22	1.36	8.35	1.32	8.59	1.29
	25	6.41	1.58	6.59	1.48	7.43	1.32	8.62	1.29	8.86	1.25
	20	6.70	1.50	6.87	1.45	7.65	1.28	8.88	1.26	9.13	1.21
AHW-060HCDS1 + AHM-060HCDSAA	60	4.88	2.84	5.48	2.71	6.42	2.63	6.73	2.40	6.89	2.32
	55	5.63	2.70	6.00	2.59	7.50	2.53	7.76	2.32	8.00	2.25
	50	6.11	2.63	6.52	2.55	7.74	2.48	8.28	2.21	8.60	2.13
	45	6.58	2.57	7.04	2.48	8.25	2.40	8.80	2.07	8.92	1.93
	40	6.74	2.44	7.14	2.34	8.57	2.19	9.16	1.87	9.31	1.77
	35	6.89	2.30	7.24	2.17	8.90	1.92	9.52	1.70	9.72	1.60
	30	7.06	2.16	7.43	2.04	9.16	1.85	9.83	1.60	9.97	1.53
	25	7.21	2.02	7.61	1.91	9.42	1.79	10.14	1.52	10.21	1.44
	20	7.38	1.92	7.78	1.80	9.68	1.72	10.45	1.43	10.46	1.36
AHW-080HCDS1 + AHM-080HCDSAA	60	5.78	3.47	6.32	3.43	7.87	3.39	8.32	3.14	8.39	3.09
	55	6.60	3.35	7.16	3.33	9.00	3.27	9.81	2.96	9.86	2.92
	50	6.84	3.18	7.44	3.12	9.16	3.02	9.91	2.77	10.04	2.74
	45	7.25	3.00	7.71	2.90	9.31	2.80	10.01	2.57	10.22	2.55
	40	7.65	2.90	8.10	2.77	10.16	2.71	10.76	2.47	10.89	2.46
	35	8.05	2.66	8.48	2.51	11.00	2.55	11.51	2.38	11.56	2.37
	30	8.37	2.58	8.95	2.41	11.16	2.45	11.66	2.21	11.71	2.19
	25	8.70	2.50	9.41	2.31	11.31	2.34	11.81	2.05	11.86	2.01
	20	9.10	2.44	10.01	2.24	11.51	2.22	12.01	1.90	12.17	1.87

		Ambient temperature (ºC DB)							
		20		25		30		35	
	Water outlet temp (ºC)	CAP (kW)	IPT (kW)	CAP (kW)	IPT (kW)	CAP (kW)	IPT (kW)	CAP (kW)	IPT (kW)
AHW-044HCDS1 + AHM-044HCDSAA	60	6.39	1.63	6.68	1.41	6.73	1.40	6.74	1.36
	55	7.25	1.50	7.54	1.32	7.60	1.29	7.66	1.27
	50	7.72	1.45	8.08	1.29	8.24	1.26	8.37	1.25
	45	8.21	1.40	8.62	1.25	8.90	1.23	8.96	1.22
	40	8.48	1.33	8.88	1.23	9.05	1.21	9.17	1.20
	35	8.74	1.26	9.15	1.20	9.22	1.19	9.29	1.18
	30	9.01	1.22	9.42	1.16	9.49	1.14	9.55	1.12
	25	9.28	1.18	9.69	1.11	9.76	1.07	9.82	1.04
	20	9.55	1.14	9.96	1.07	10.18	1.04	10.22	1.01
AHW-060HCDS1 + AHM-060HCDSAA	60	7.17	2.18	7.45	2.11	7.51	2.07	7.52	2.05
	55	8.40	2.12	8.80	1.99	8.87	1.95	8.94	1.92
	50	8.79	1.96	9.06	1.78	9.24	1.74	9.38	1.71
	45	9.17	1.75	9.31	1.57	9.62	1.56	9.69	1.54
	40	9.57	1.59	9.83	1.42	10.02	1.40	10.14	1.39
	35	10.04	1.44	10.36	1.28	10.43	1.27	10.52	1.26
	30	10.18	1.38	10.40	1.24	10.47	1.22	10.54	1.19
	25	10.33	1.32	10.45	1.20	10.52	1.17	10.59	1.13
	20	10.52	1.26	10.55	1.15	10.64	1.12	10.78	1.09
AHW-080HCDS1 + AHM-080HCDSAA	60	8.59	3.03	8.78	3.00	8.85	2.93	8.86	2.91
	55	9.93	2.86	10.01	2.80	10.09	2.73	10.17	2.70
	50	10.25	2.69	10.46	2.65	10.67	2.60	10.89	2.55
	45	10.56	2.53	10.91	2.50	11.27	2.47	11.35	2.45
	40	11.10	2.44	11.31	2.41	11.52	2.38	11.67	2.35
	35	11.63	2.34	11.71	2.32	11.79	2.30	11.87	2.28
	30	11.78	2.15	11.86	2.11	11.94	2.07	12.02	2.04
	25	11.93	1.96	12.01	1.90	12.09	1.85	12.17	1.79
	20	12.44	1.83	12.71	1.78	12.99	1.73	13.11	1.69

NOTE:
CAP: Capacity at compressor maximum frequency. Capacity is valid for difference between water inlet and water outlet of 3-8°C.
IPT: Total input power.
The table above shows the input power (IPT) at maximum capacity (CAP). Most of the time, the unit will run at partial load, so that the actual input power will be lower.

3.1.2 Maximum cooling capacity table (kW)

		Ambient temperature (ºC DB)									
		5		10		15		20		25	
	Water outlet temp (ºC)	CAP (kW)	IPT (kW)	CAP (kW)	IPT (kW)	CAP (kW)	IPT (kW)	CAP (kW)	IPT (kW)	CAP (kW)	IPT (kW)
AHW-044HCDS1 + AHM-044HCDSAA	22										
	18					7.85	0.94	7.65	0.96	7.24	0.99
	15	7.22	0.91	7.14	0.95	7.06	0.98	6.97	1.00	6.89	1.02
	10	6.89	0.93	6.78	0.97	6.71	1.01	6.50	1.04	6.27	1.08
	7					6.22	1.03	6.12	1.07	5.92	1.12
	5					5.61	1.08	5.30	1.17	5.00	1.26
AHW-060HCDS1 + AHM-060HCDSAA	22										
	18					9.14	1.17	8.93	1.20	8.72	1.23
	15	8.58	1.15	8.51	1.19	8.43	1.22	8.36	1.24	8.10	1.27
	10	8.12	1.21	7.98	1.24	7.84	1.27	7.71	1.29	7.57	1.33
	7					7.35	1.32	7.25	1.34	6.99	1.37
	5					6.93	1.38	6.75	1.41	6.37	1.46
AHW-080HCDS1 + AHM-080HCDSAA	22										
	18					10.44	1.35	10.22	1.50	10.01	1.62
	15	10.08	1.19	9.94	1.31	9.79	1.44	9.50	1.57	9.36	1.68
	10	9.33	1.25	9.14	1.37	8.96	1.50	8.78	1.64	8.50	1.78
	7					8.26	1.60	8.06	1.71	7.85	1.83
	5					7.99	1.65	7.78	1.77	7.42	1.89

		Ambient temperature (ºC DB)							
		30		35		40		45	
	Water outlet temp (ºC)	CAP (kW)	IPT (kW)	CAP (kW)	IPT (kW)	CAP (kW)	IPT (kW)	CAP (kW)	IPT (kW)
AHW-044HCDS1 + AHM-044HCDSAA	22	7.09	1.02	6.58	1.10	6.12	1.18	5.61	1.26
	18	6.83	1.06	6.27	1.16	5.71	1.25	5.20	1.32
	15	6.40	1.10	5.91	1.19	5.42	1.29	4.93	1.38
	10	5.82	1.17	5.37	1.25	4.92	1.36	4.46	1.47
	7	5.51	1.23	5.10	1.33	4.64	1.43	4.18	1.52
	5	4.69	1.34	4.39	1.43	4.08	1.52	3.77	1.61
AHW-060HCDS1 + AHM-060HCDSAA	22	8.51	1.26	7.88	1.33	7.25	1.40	6.62	1.48
	18	8.30	1.34	7.56	1.44	6.93	1.54	6.30	1.65
	15	7.72	1.37	7.15	1.48	6.58	1.59	6.02	1.70
	10	7.07	1.44	6.55	1.55	6.05	1.67	5.53	1.78
	7	6.62	1.56	6.30	1.72	5.78	1.86	5.25	2.00
	5	5.99	1.67	5.60	1.84	5.22	1.99	4.83	2.12
AHW-080HCDS1 + AHM-080HCDSAA	22	10.18	1.64	9.57	1.71	8.95	1.77	8.33	1.83
	18	9.77	1.71	9.07	1.79	8.23	1.85	7.56	1.93
	15	9.11	1.78	8.38	1.86	7.65	1.95	6.98	2.03
	10	8.19	1.89	7.61	1.99	7.04	2.11	6.45	2.21
	7	7.70	1.95	7.20	2.08	6.69	2.20	6.17	2.33
	5	7.23	2.00	6.77	2.12	6.33	2.27	5.76	2.39

NOTE:

CAP: Capacity at compressor maximum frequency. Capacity is valid for difference between water inlet and water outlet of 3-8°C.

IPT: Total input power.

3.2 Hi-Therma Monobloc

3.2.1 Maximum heating capacity table (kW) (Integrated)

		Ambient temperature (ºC DB)									
		-25		-20		-15		-10		-7	
	Water outlet temp (ºC)	CAP (kW)	IPT (kW)	CAP (kW)	IPT (kW)	CAP (kW)	IPT (kW)	CAP (kW)	IPT (kW)	CAP (kW)	IPT (kW)
AHZ-044HCDS1	60									3.64	2.35
	55							3.65	2.17	4.20	2.30
	50					3.84	2.14	4.23	2.12	4.34	2.25
	45	3.47	2.27	3.88	2.18	4.12	2.10	4.57	2.03	4.62	2.20
	40	3.80	2.23	4.02	2.14	4.25	2.05	4.78	1.95	4.90	2.11
	35	3.98	2.21	4.17	2.10	4.36	1.95	4.87	1.86	5.00	1.99
	30	4.09	2.17	4.36	2.04	4.65	1.91	5.15	1.76	5.25	1.86
	25	4.20	2.05	4.56	1.95	4.94	1.86	5.43	1.66	5.74	1.70
	20	4.31	1.91	4.75	1.86	5.23	1.82	5.71	1.56	5.95	1.56
AHZ-080HCDS1	60									5.10	3.81
	55							5.76	3.94	6.40	3.52
	50					5.34	3.55	6.00	3.32	6.49	3.24
	45	4.84	3.41	5.25	3.32	5.71	3.28	6.31	3.18	6.68	3.12
	40	5.13	3.38	5.64	3.29	6.20	3.20	6.76	3.11	7.09	3.06
	35	5.77	3.14	6.01	3.11	6.33	3.07	7.04	2.93	7.30	2.85
	30	6.00	3.12	6.26	3.07	6.53	3.01	7.24	2.87	7.66	2.80
	25	6.22	3.12	6.51	3.03	6.81	2.95	7.43	2.82	7.81	2.74
	20	6.44	3.10	6.76	2.99	7.09	2.89	7.63	2.77	7.95	2.69

		Ambient temperature (ºC DB)									
		-2		2		7		12		15	
	Water outlet temp (ºC)	CAP (kW)	IPT (kW)	CAP (kW)	IPT (kW)	CAP (kW)	IPT (kW)	CAP (kW)	IPT (kW)	CAP (kW)	IPT (kW)
AHZ-044HCDS1	60	3.92	2.31	4.39	2.31	5.38	2.20	5.92	1.93	6.10	1.78
	55	4.82	2.28	5.16	2.27	6.00	2.07	6.78	1.83	6.96	1.70
	50	5.22	2.16	5.55	2.08	6.62	1.99	7.16	1.73	7.38	1.63
	45	5.62	2.03	5.81	1.89	6.78	1.80	7.54	1.65	7.79	1.56
	40	5.73	1.89	5.99	1.72	6.89	1.61	7.81	1.50	8.06	1.44
	35	5.84	1.76	6.09	1.55	7.00	1.40	8.08	1.36	8.32	1.32
	30	6.13	1.67	6.32	1.52	7.22	1.36	8.35	1.32	8.59	1.29
	25	6.41	1.58	6.59	1.48	7.43	1.32	8.62	1.29	8.86	1.25
	20	6.70	1.50	6.87	1.45	7.65	1.28	8.88	1.26	9.13	1.21
AHZ-080HCDS1	60	5.78	3.47	6.32	3.43	7.87	3.39	8.32	3.14	8.39	3.09
	55	6.60	3.35	7.16	3.33	9.00	3.27	9.81	2.96	9.86	2.92
	50	6.84	3.18	7.44	3.12	9.16	3.02	9.91	2.77	10.04	2.74
	45	7.25	3.00	7.71	2.90	9.31	2.80	10.01	2.57	10.22	2.55
	40	7.65	2.90	8.10	2.77	10.16	2.71	10.76	2.47	10.89	2.46
	35	8.05	2.66	8.48	2.51	11.00	2.55	11.51	2.38	11.56	2.37
	30	8.37	2.58	8.95	2.41	11.16	2.45	11.66	2.21	11.71	2.19
	25	8.70	2.50	9.41	2.31	11.31	2.34	11.81	2.05	11.86	2.01
	20	9.10	2.44	10.01	2.24	11.51	2.22	12.01	1.90	12.17	1.87

NOTE:
CAP: Capacity at compressor maximum frequency. Capacity is valid for difference between water inlet and water outlet of 3-8°C.
IPT: Total input power.
The table above shows the input power (IPT) at maximum capacity (CAP). Most of the time, the unit will run at partial load, so that the actual input power will be lower.

		Ambient temperature (ºC DB)							
		20		25		30		35	
	Water outlet temp (ºC)	CAP (kW)	IPT (kW)	CAP (kW)	IPT (kW)	CAP (kW)	IPT (kW)	CAP (kW)	IPT (kW)
AHZ-044HCDS1	60	6.39	1.63	6.68	1.41	6.73	1.40	6.74	1.36
	55	7.25	1.50	7.54	1.32	7.60	1.29	7.66	1.27
	50	7.72	1.45	8.08	1.29	8.24	1.26	8.37	1.25
	45	8.21	1.40	8.62	1.25	8.90	1.23	8.96	1.22
	40	8.48	1.33	8.88	1.23	9.05	1.21	9.17	1.20
	35	8.74	1.26	9.15	1.20	9.22	1.19	9.29	1.18
	30	9.01	1.22	9.42	1.16	9.49	1.14	9.55	1.12
	25	9.28	1.18	9.69	1.11	9.76	1.07	9.82	1.04
	20	9.55	1.14	9.96	1.07	10.18	1.04	10.22	1.01
AHZ-080HCDS1	60	8.59	3.03	8.78	3.00	8.85	2.93	8.86	2.91
	55	9.93	2.86	10.01	2.80	10.09	2.73	10.17	2.70
	50	10.25	2.69	10.46	2.65	10.67	2.60	10.89	2.55
	45	10.56	2.53	10.91	2.50	11.27	2.47	11.35	2.45
	40	11.10	2.44	11.31	2.41	11.52	2.38	11.67	2.35
	35	11.63	2.34	11.71	2.32	11.79	2.30	11.87	2.28
	30	11.78	2.15	11.86	2.11	11.94	2.07	12.02	2.04
	25	11.93	1.96	12.01	1.90	12.09	1.85	12.17	1.79
	20	12.44	1.83	12.71	1.78	12.99	1.73	13.11	1.69

NOTE:
CAP: Capacity at compressor maximum frequency. Capacity is valid for difference between water inlet and water outlet of 3-8°C.
IPT: Total input power.
The table above shows the input power (IPT) at maximum capacity (CAP). Most of the time, the unit will run at partial load, so that the actual input power will be lower.

3.2.2 Maximum cooling capacity table (kW)

		Ambient temperature (ºC DB)									
		5		10		15		20		25	
	Water outlet temp (ºC)	CAP (kW)	IPT (kW)	CAP (kW)	IPT (kW)	CAP (kW)	IPT (kW)	CAP (kW)	IPT (kW)	CAP (kW)	IPT (kW)
AHZ-044HCDS1	22										
	18					7.85	0.94	7.65	0.96	7.24	0.99
	15	7.22	0.91	7.14	0.95	7.06	0.98	6.97	1.00	6.89	1.02
	10	6.89	0.93	6.78	0.97	6.71	1.01	6.50	1.04	6.27	1.08
	7					6.22	1.03	6.12	1.07	5.92	1.12
	5					5.61	1.08	5.30	1.17	5.00	1.26
AHZ-080HCDS1	22										
	18					10.44	1.35	10.22	1.50	10.01	1.62
	15	10.08	1.19	9.94	1.31	9.79	1.44	9.50	1.57	9.36	1.68
	10	9.33	1.25	9.14	1.37	8.96	1.50	8.78	1.64	8.50	1.78
	7					8.26	1.60	8.06	1.71	7.85	1.83
	5					7.99	1.65	7.78	1.77	7.42	1.89

		Ambient temperature (ºC DB)							
		30		35		40		45	
	Water outlet temp (ºC)	CAP (kW)	IPT (kW)	CAP (kW)	IPT (kW)	CAP (kW)	IPT (kW)	CAP (kW)	IPT (kW)
AHZ-044HCDS1	22	7.09	1.02	6.58	1.10	6.12	1.18	5.61	1.26
	18	6.83	1.06	6.27	1.16	5.71	1.25	5.20	1.32
	15	6.40	1.10	5.91	1.19	5.42	1.29	4.93	1.38
	10	5.82	1.17	5.37	1.25	4.92	1.36	4.46	1.47
	7	5.51	1.23	5.10	1.33	4.64	1.43	4.18	1.52
	5	4.69	1.34	4.39	1.43	4.08	1.52	3.77	1.61
AHZ-080HCDS1	22	10.18	1.64	9.57	1.71	8.95	1.77	8.33	1.83
	18	9.77	1.71	9.07	1.79	8.23	1.85	7.56	1.93
	15	9.11	1.78	8.38	1.86	7.65	1.95	6.98	2.03
	10	8.19	1.89	7.61	1.99	7.04	2.11	6.45	2.21
	7	7.70	1.95	7.20	2.08	6.69	2.20	6.17	2.33
	5	7.23	2.00	6.77	2.12	6.33	2.27	5.76	2.39

NOTE:

CAP: Capacity at compressor maximum frequency. Capacity is valid for difference between water inlet and water outlet of 3-8°C.

IPT: Total input power.

3.3 Correction factors

3.3.1 Piping length correction factor

The correction factor is based on the equivalent piping length in metres (EL) and the height difference between outdoor unit and indoor unit in metres (H).

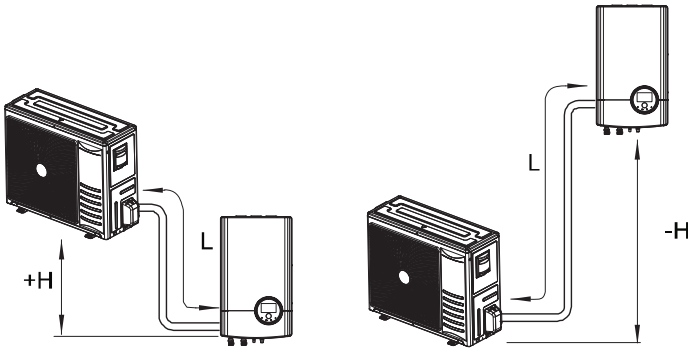

H: Height difference between indoor unit and outdoor unit (m).

- H>0: Outdoor unit is placed higher than indoor unit (m).
- H<0: Outdoor unit is placed lower than indoor unit (m).

L: Actual one-way piping length between indoor unit and outdoor unit (m).

EL: Equivalent one-way piping length between indoor unit and outdoor unit (m).

- One 90º elbow is 0.5 m.
- One 180º bend is 1.5 m.

3.3.2 Correction factor owing to use of glycol (only for Hi-Therma Monobloc)

Application at low ambient temperature

When the ambient temperature is low in winter, the water in the pipes and circulating pump may freeze and damage the pipes and water pumps during shutdown periods.

To prevent this, it is useful to drain the water from the installation or not to cut off the power supply of the installation, anti-freezing function will be triggered to prevent freezing.

In addition, in cases where it is difficult to drain the water, it is advisable to use a mixture with antifreeze glycol (ethylene or propylene at a concentration between 10% and 40%).

Unit performance may be reduced when operating with glycol, depending on the percentage of glycol used, since glycol is denser than water.

Two tables are shown below (one for ethylene glycol and the other for propylene glycol), indicating the percentage of ethylene glycol recommended for diverse values of outdoor air inlet temperature, with their respective correction factors.

Corrected heating capacity = capacity correction factor owing to use of glycol × heating capacity

-Ethylene glycol

Ambient Temperature	DB (°C)	10	7	5	2	-3	-7	-13	-22
Percentage of glycol required	%	10	10	10	10	10	20	30	40
Capacity correction factor	fgh	1.00	1.00	1.00	1.00	1.00	1.00	0.99	0.99
Consumed power correction factor	fgi	0.97	0.98	0.99	1.00	1.01	1.02	1.03	1.04
Flow rate correction factor	fgc	1.00	1.00	1.00	1.00	1.01	1.01	1.02	1.04
Pressure loss correction factor	fgp	0.88	0.92	0.94	0.98	1.03	1.09	1.16	1.26

Propylene glycol

Ambient Temperature	DB (°C)	10	7	5	2	-3	-7	-13	-22
Percentage of glycol required	%	10	10	10	10	10	20	30	40
Capacity correction factor	fgh	1.00	1.00	1.00	1.00	1.00	1.00	0.99	0.99
Consumed power correction factor	fgi	0.97	0.98	0.99	1.00	1.01	1.02	1.03	1.04
Flow rate correction factor	fgc	1.00	1.00	1.01	1.01	1.02	1.02	1.04	1.07
Pressure loss correction factor	fgp	1.06	1.11	1.13	1.18	1.24	1.31	1.39	1.51

⚠ CAUTION

The use of glycol affects to the reading of some parameters like “water flow level” and “capacity” shown through the unit controller menu. When glycol is used, these data are not correct and must be not used.

4. Acoustic characteristic curves

4.1 Considerations

1. Distance of the unit from the measuring point, as shown in the figure below.

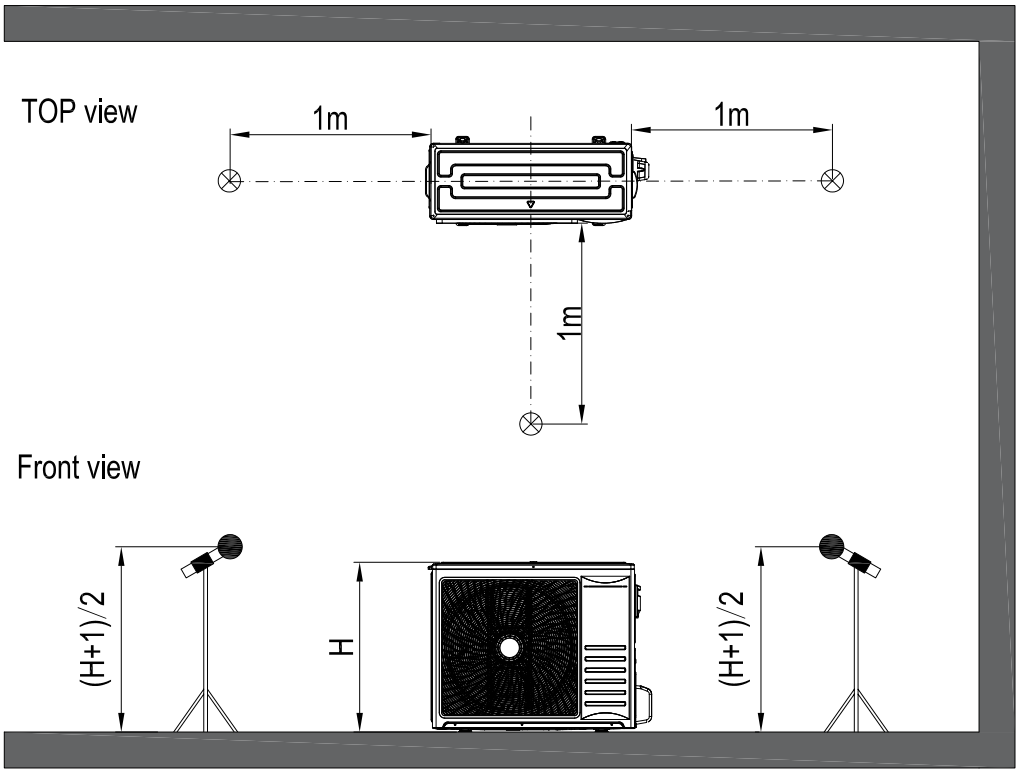

2. The data is measured in an anechoic chamber, so reflected sound should be taken into consideration when installing the unit.
3. The sound measured with the curve A shown in dB(A) represents the attenuation in function of frequency as perceived by the human ear.
4. Reference acoustic pressure 0 dB=20 μPa

4.2 Sound pressure level

AHW-044HCDS1

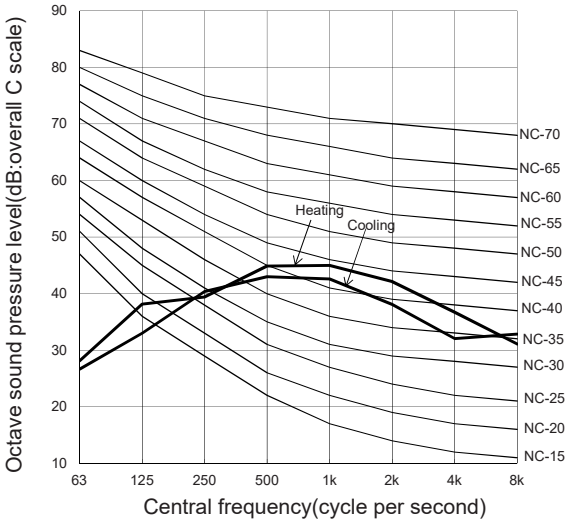

AHW-060HCDS1

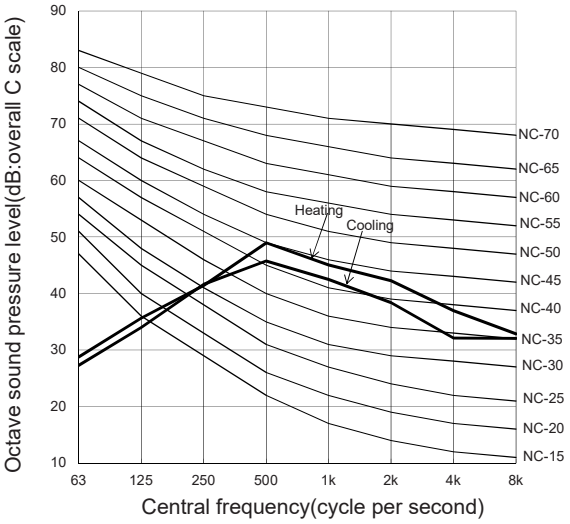

AHW-080HCDS1

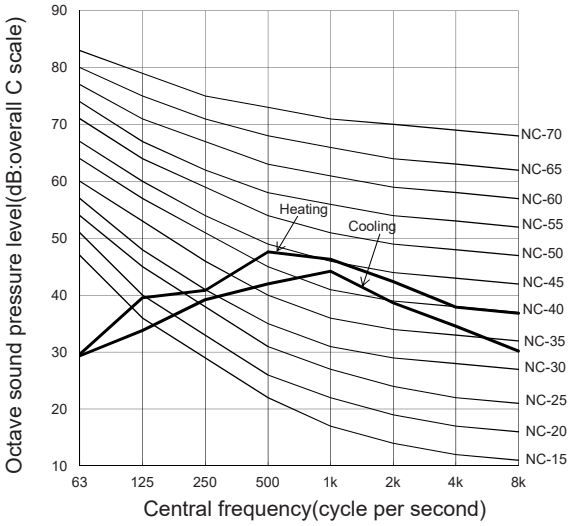

AHZ-044HCDS1

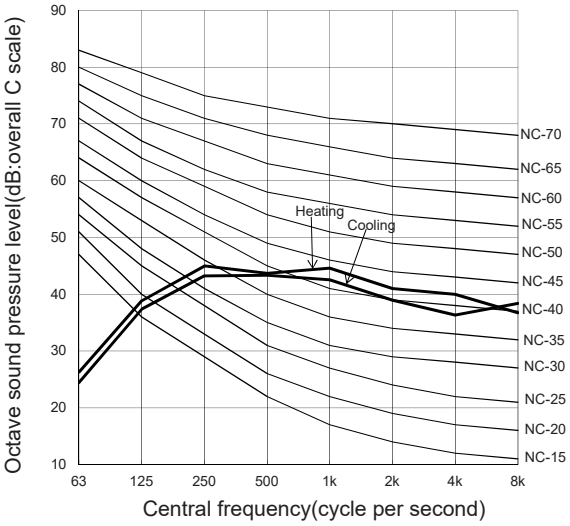

AHZ-080HCDS1

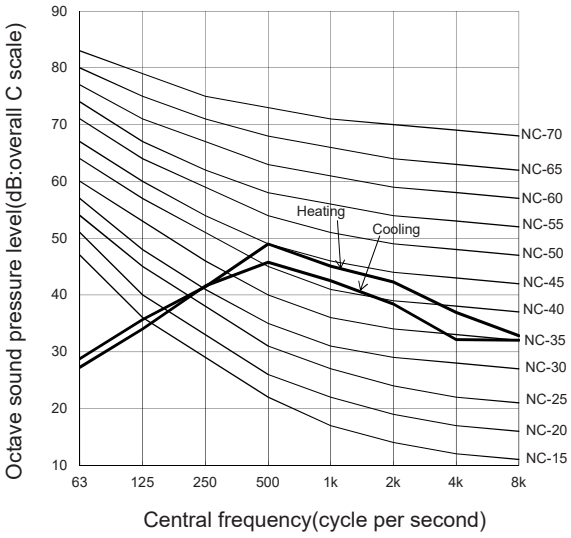

5. Working range

5.1 Power supply working range

Nominal power supply

Single phase: 220-240V~ 50Hz

Operating voltage

Between 90 and 110% of the nominal voltage.

Starting voltage

Always higher than 85% of the nominal voltage.

5.2 Temperature working range

Model		2.0HP	2.5HP	3.0HP
Water temperature	°C	Refer to the graphics for each case		
Indoor ambient temperature	°C	5~30		

5.2.1 Space heating

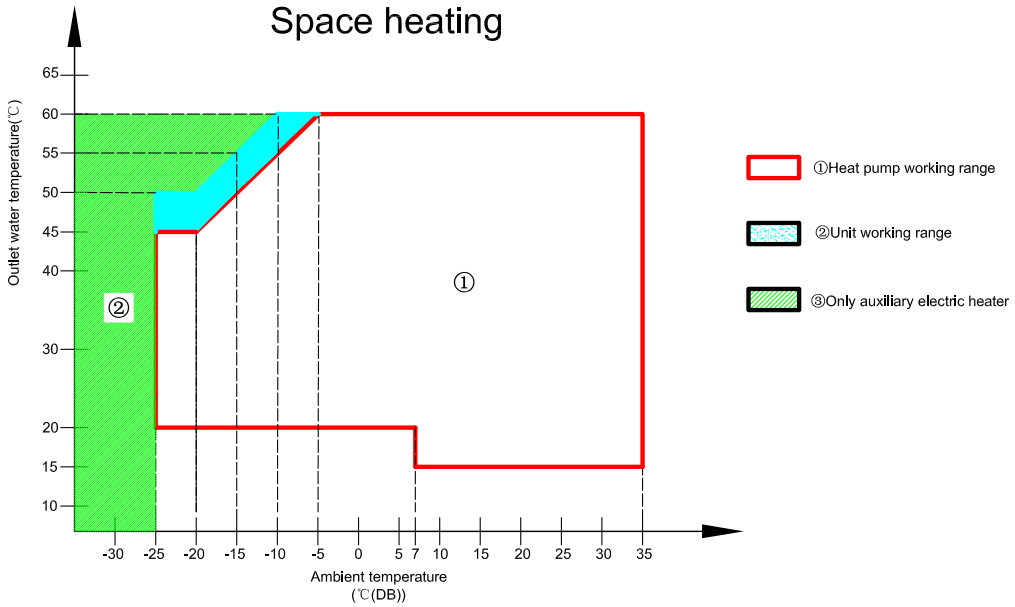

NOTE

Items ② and ③ only available if auxiliary electric heater is enabled.

5.2.2 DHW

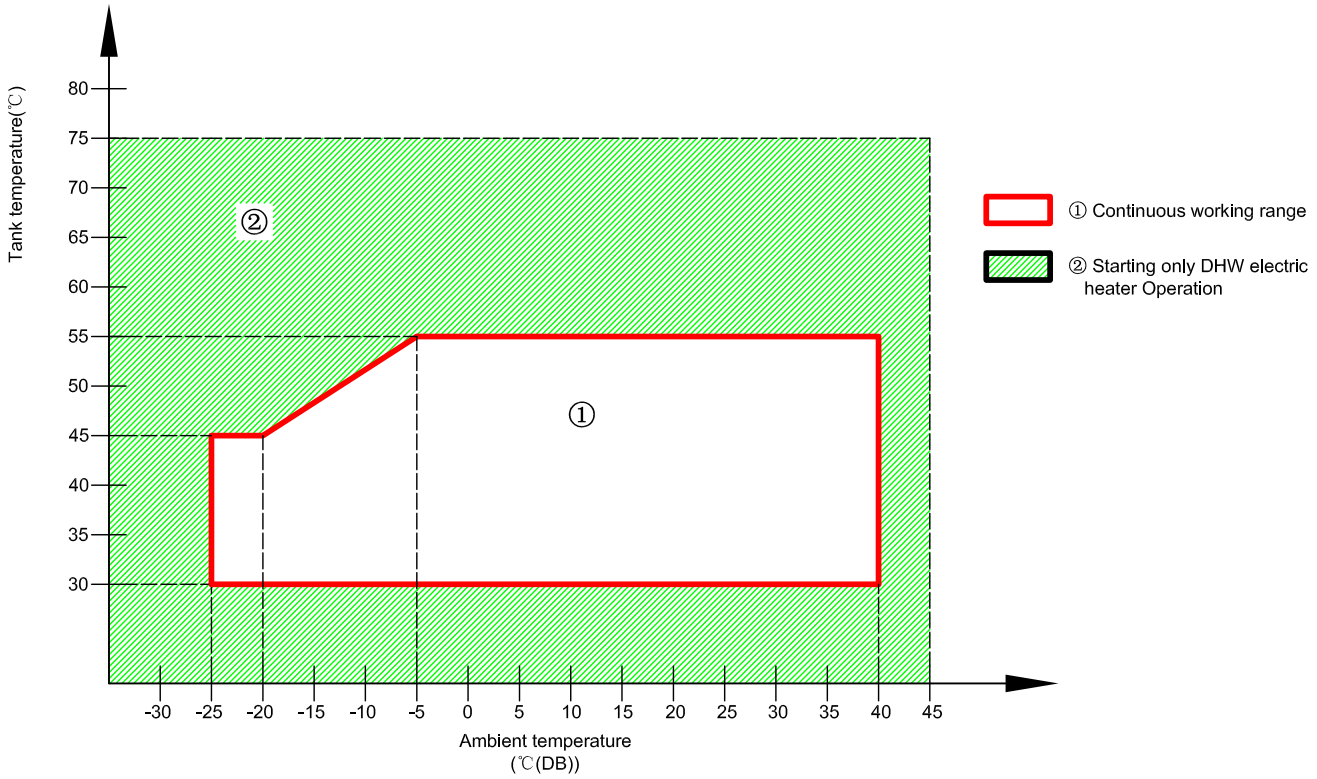

5.2.3 Swimming pool

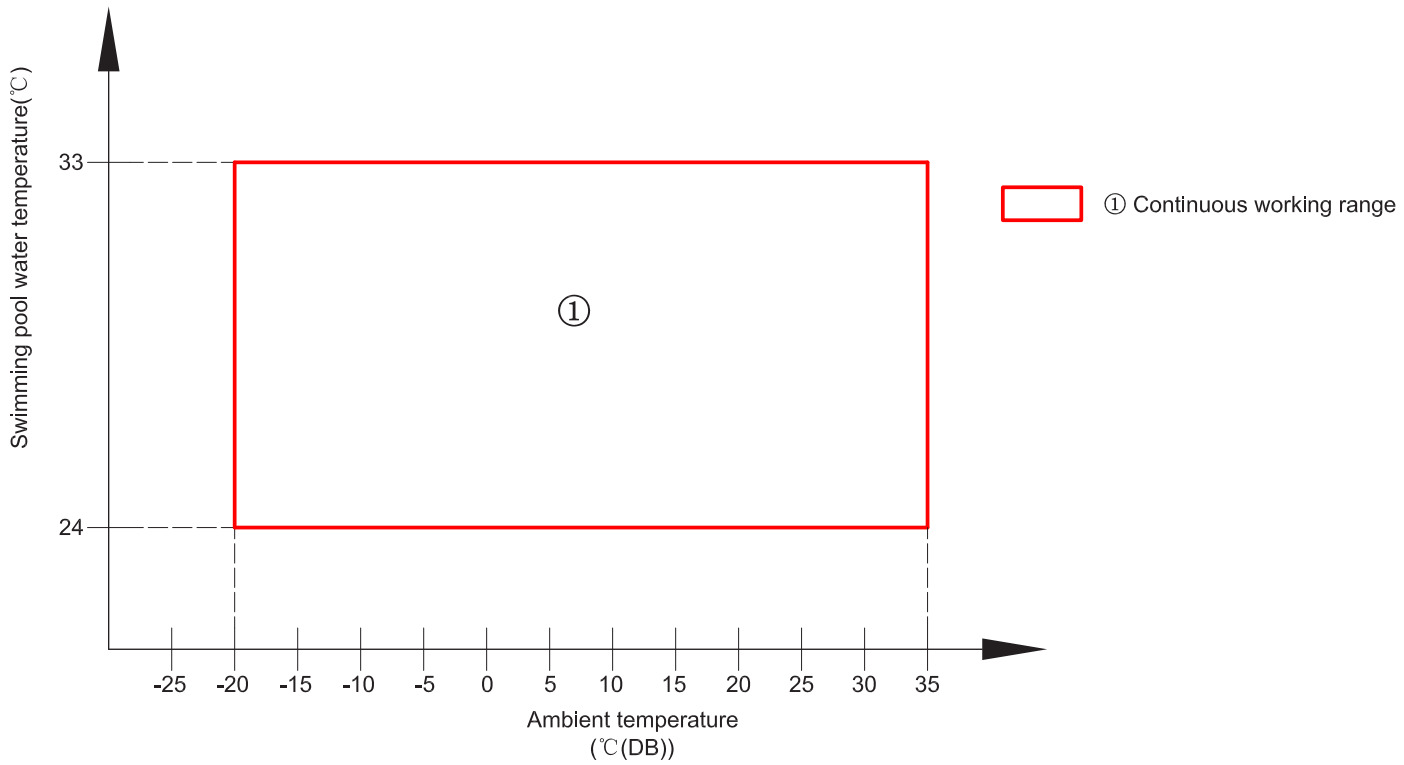

5.2.4 Space cooling

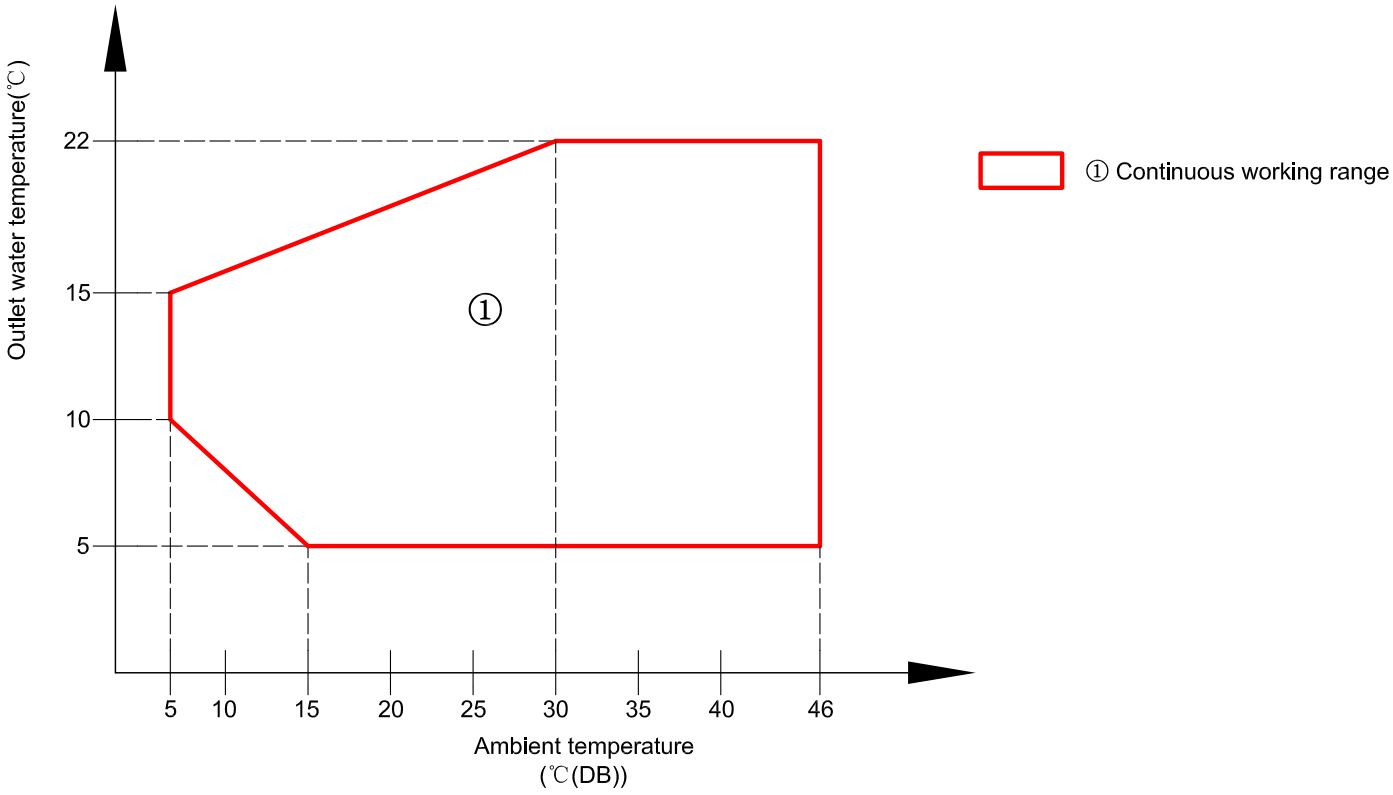

5.3 Hydraulic working range

5.3.1 Hydraulic data

- Hi-Therma Split

Model		2.0HP	2.5HP	3.0HP
Minimum water flow rate (*1)	m^3/h			
Maximum water flow rate (*1)	m^3/h			
Minimum installation water volume	L			
Minimum allowable water pressure	MPa	0.1		
Maximum allowable water pressure	MPa	0.3		

- Hi-Therma Monobloc

Model		2.0HP	3.0HP
Minimum water flow rate (*1)	m^3/h		
Maximum water flow rate (*1)	m^3/h		
Minimum installation water volume	L		
Minimum allowable water pressure	MPa	0.1	
Maximum allowable water pressure	MPa	0.3	

NOTE

(*1): Values calculated based on a ΔT (inlet/outlet): 3~8 ºC

5.3.2 Pump performance curves

Split

44(2.0HP) / 60(2.5HP)

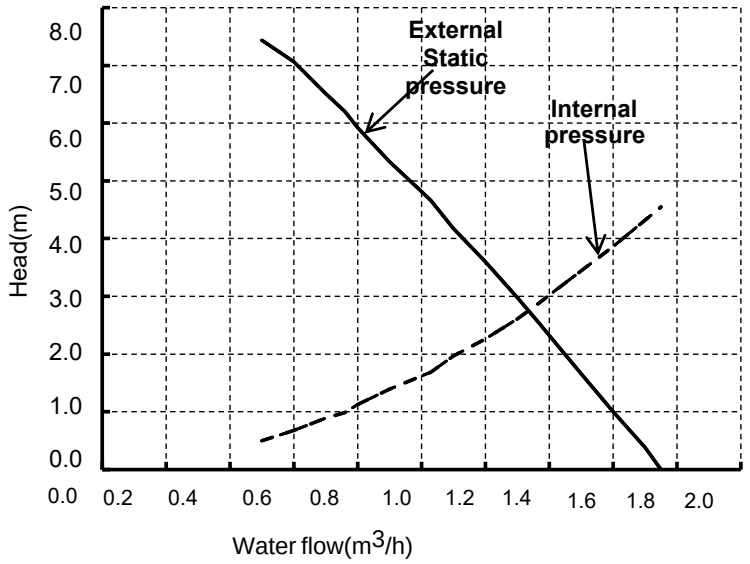

80(3.0HP)

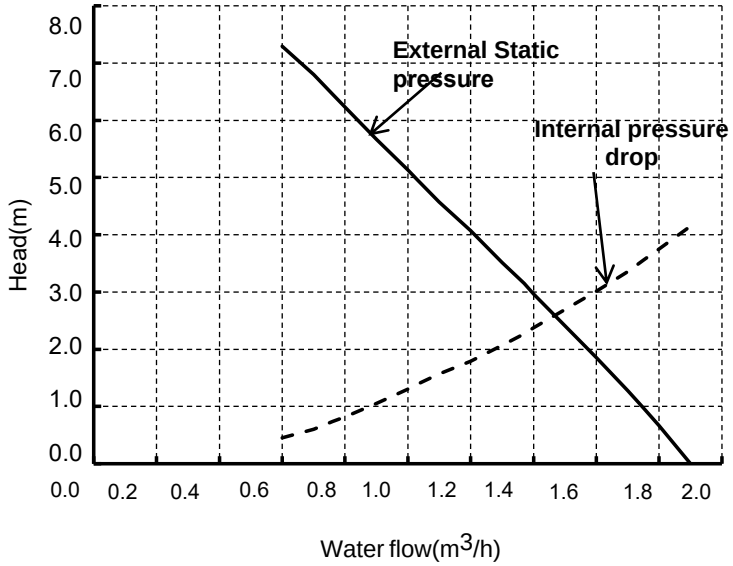

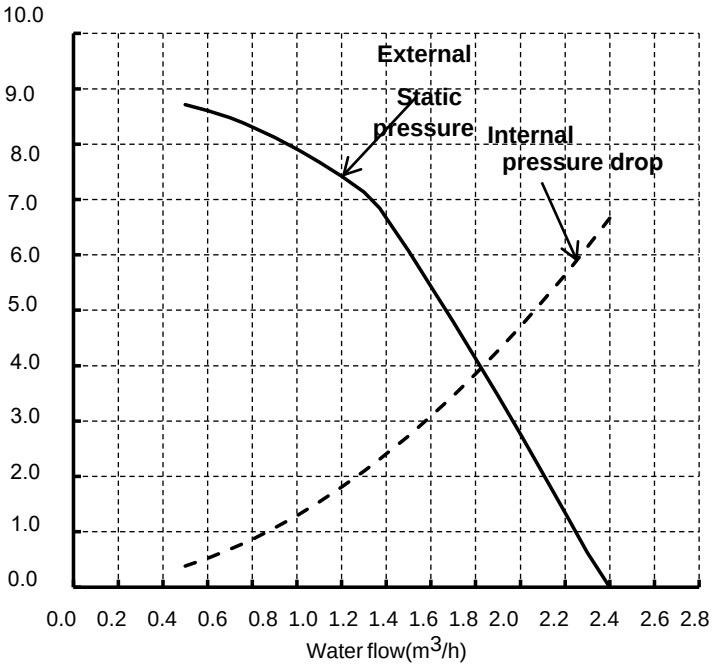

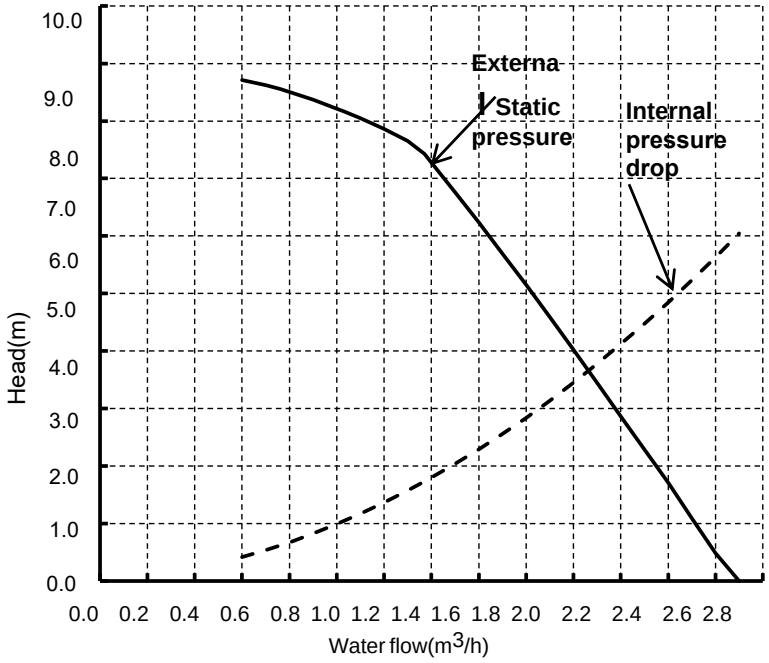

NOTE

If a water flow rate is selected out of the working range of the unit, it can cause malfunction on the unit. Please, try to operate the pump within the minimum and maximum water flow of the indoor unit.

6. General dimensions

6.1 Hi-Therma Split Indoor Unit

6.1.1 Dimensional data of Hi-Therma Split Indoor Unit

6.1.2 Structure of Hi-Therma Split Indoor Unit

6.2 Hi-Therma Split Outdoor Unit

6.2.1 Dimensional data of Hi-Therma Split Outdoor Unit

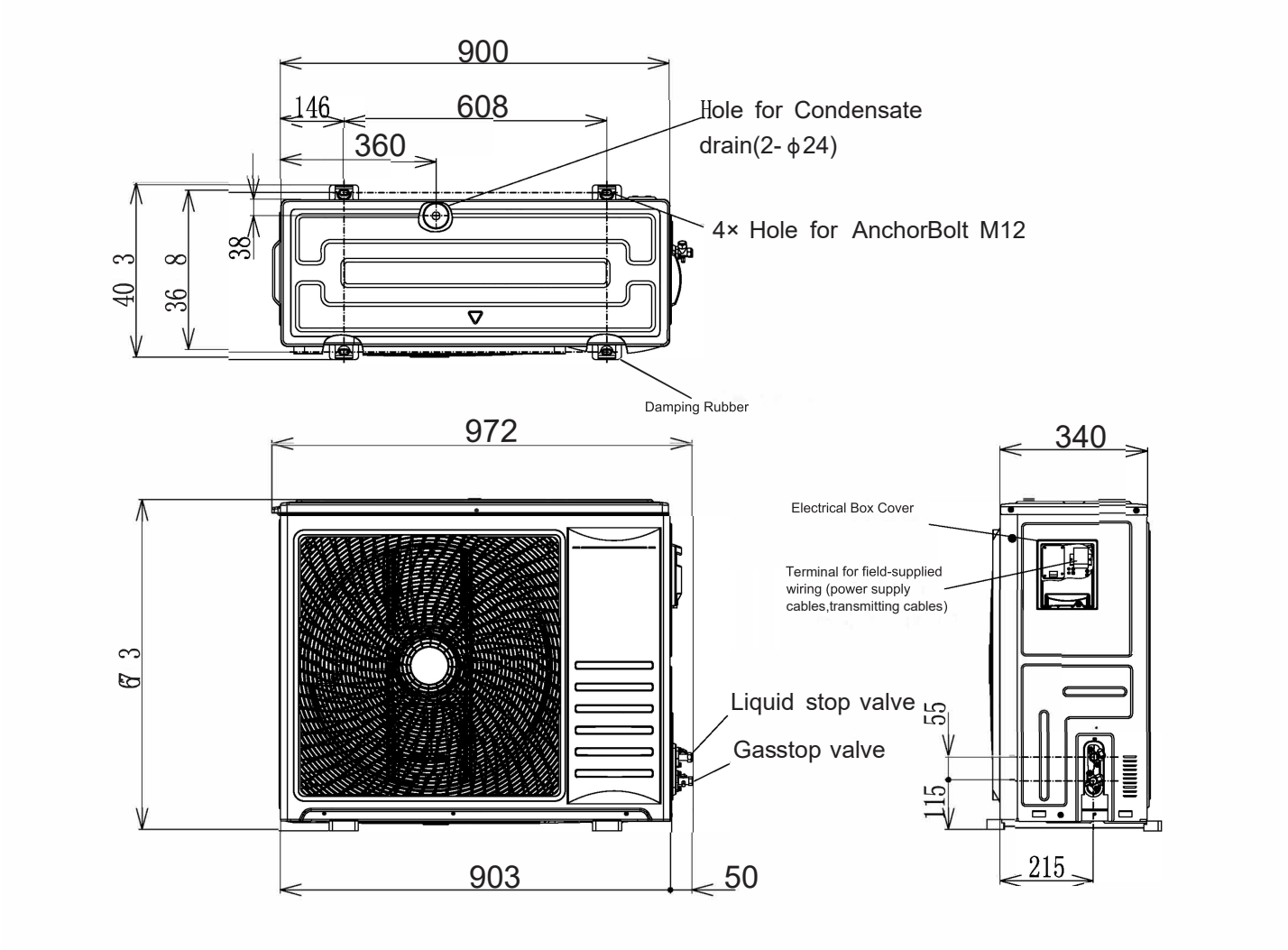

6.2.2 Structure of Hi-Therma Split Outdoor Unit

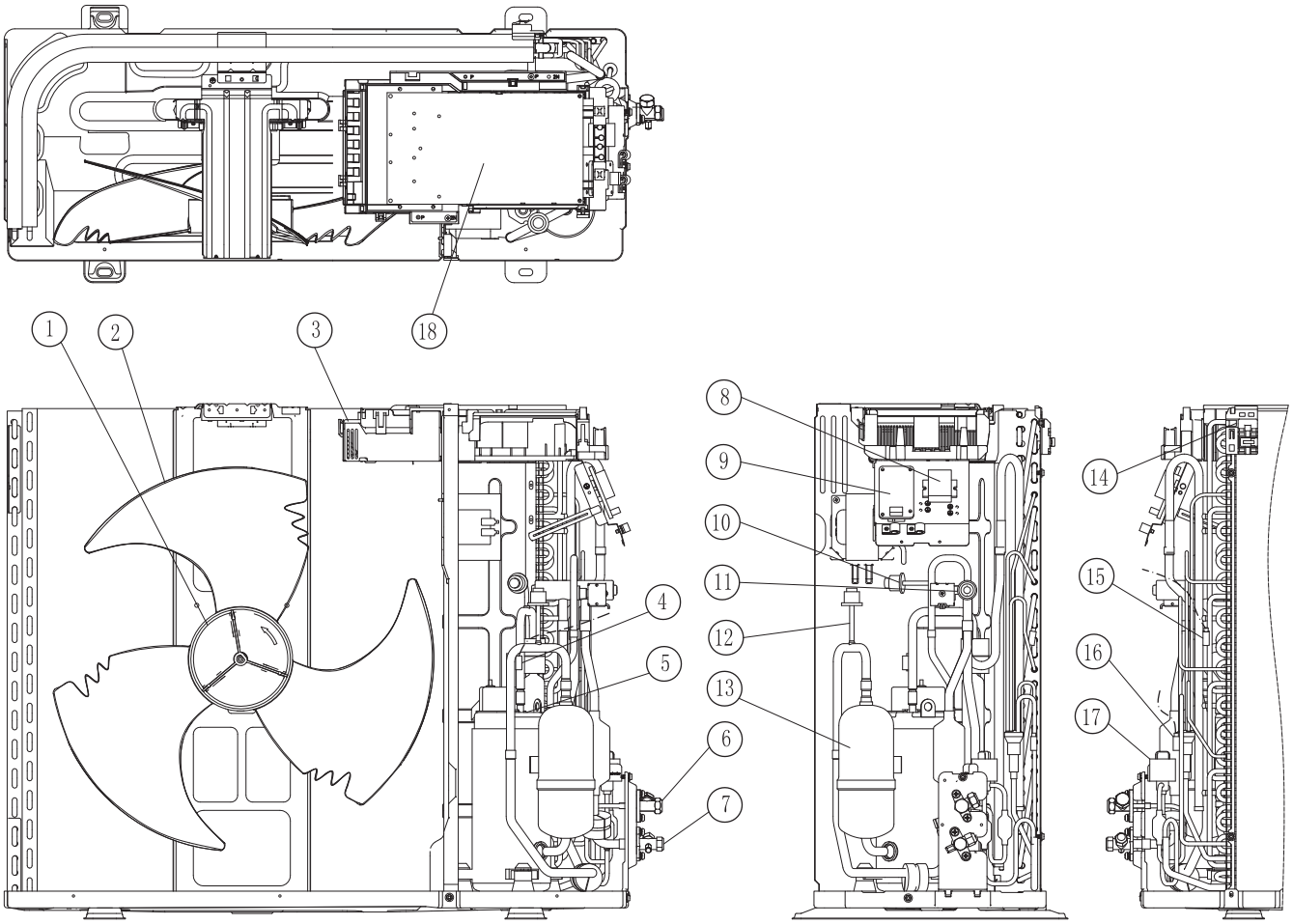

Mark	Part Name
1	Fan Motor
2	Propeller Fan
3	Electrical Box
4	Compressor Discharge Gas Thermistor (Td)
5	Compressor
6	Gas Stop Valve
7	Liquid Stop Valve
8	Terminal Board for Power Supply (TB1)
9	Terminal Board for Transmission (TB2)
10	High Pressure Switch (PSH)
11	4-way Reversing Valve and Coil
12	Low Pressure Switch (PSL)
13	Accumulator
14	Outdoor Unit Ambient Thermistor (Ta)
15	Heat Exchanger Liquid Pipe Thermistor2 (Te2)
16	Heat Exchanger Liquid Pipe Thermistor (Te)
17	Electronic Expansion Valve and Coil
18	PCB

6.3 Hi-Therma Monobloc

6.3.1 Dimensional data of Hi-Therma Monobloc

6.3.2 Structure of Hi-Therma Monobloc

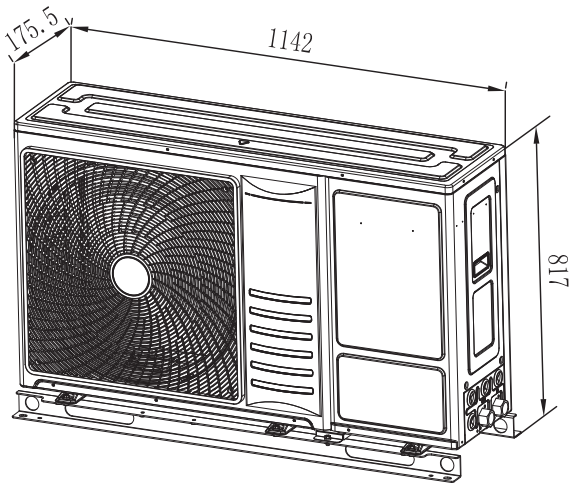

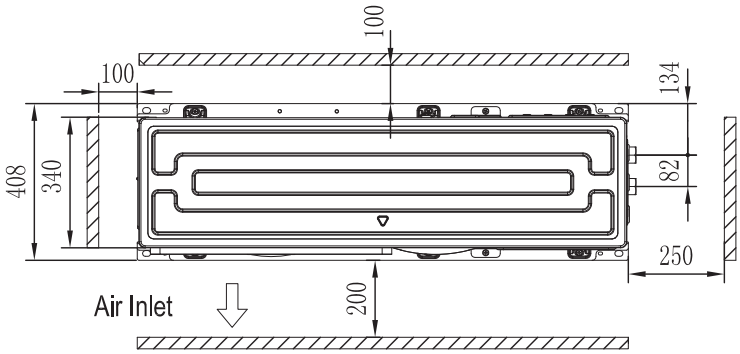

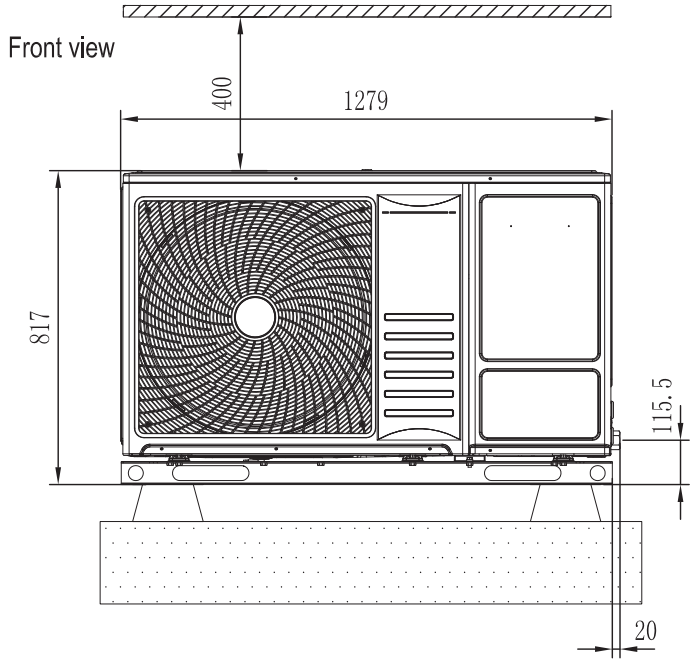

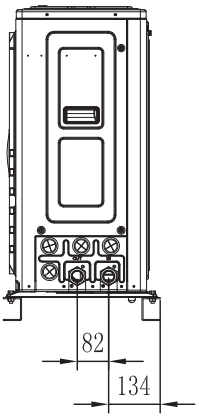

7. Refrigerant cycle and hydraulic circuit

7.1 Hi-Therma Split

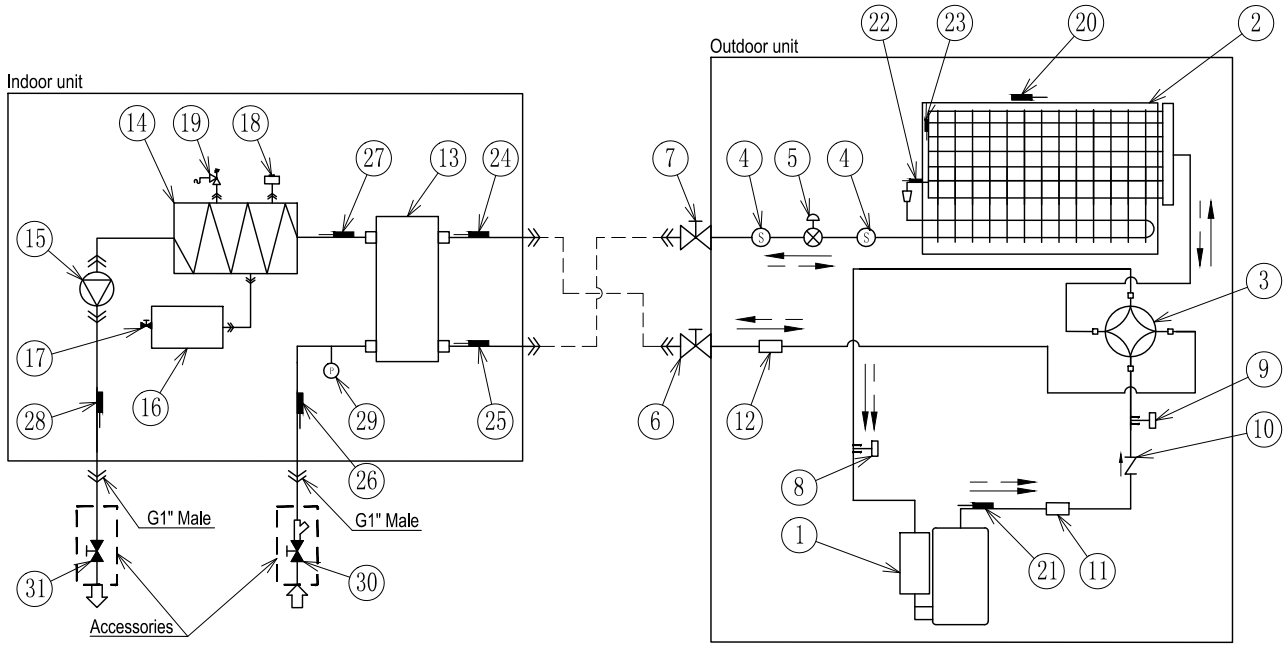

					Refrigerant
Cooling refrigerant flow	Heating refrigerant flow	Field supplied piping line	Water flow (Heating/Cooling)	Flare nut connection	R32

No.	Part name	No.	Part name	No.	Part name	No.	Part name
1	Compressor	9	High Pressure Switch (PSH)	17	Pressure Adjustment Valve of Expansion Vessel	25	Liquid Refrigerant Pipe Thermistor (TL)
2	Heat Exchanger	10	Refrigerant Check Valve	18	Air Purge Valve	26	Inlet Water Thermistor (Tiw)
3	4-way Reversing Valve and Coil	11	Silencer	19	Safety Valve	27	Outlet HP Water Thermistor (TowHP)
4	Strainer	12	Silencer	20	Outdoor Unit Ambient Thermistor (Ta)	28	Outlet Water Thermistor (Tow)
5	Electronic Expansion Valve and Coil	13	Plate Heat Exchanger	21	Compressor Discharge Gas Thermistor (Td)	29	Water Pressure Sensor (Pw)
6	Gas Stop Valve	14	Auxiliary Electric Heater (AEH)	22	Heat Exchanger Liquid pipe Thermistor (Te)	30	Shut-off Valve with Filter
7	Liquid Stop Valve	15	Water Pump	23	Heat Exchanger Liquid pipe Thermistor 2 (Te2)	31	Shut-off Valve
8	Low Pressure Switch (PSL)	16	Expansion Vessel	24	Gas Refrigerant Pipe Thermistor (Tg)		

7.2 Hi-Therma Monobloc

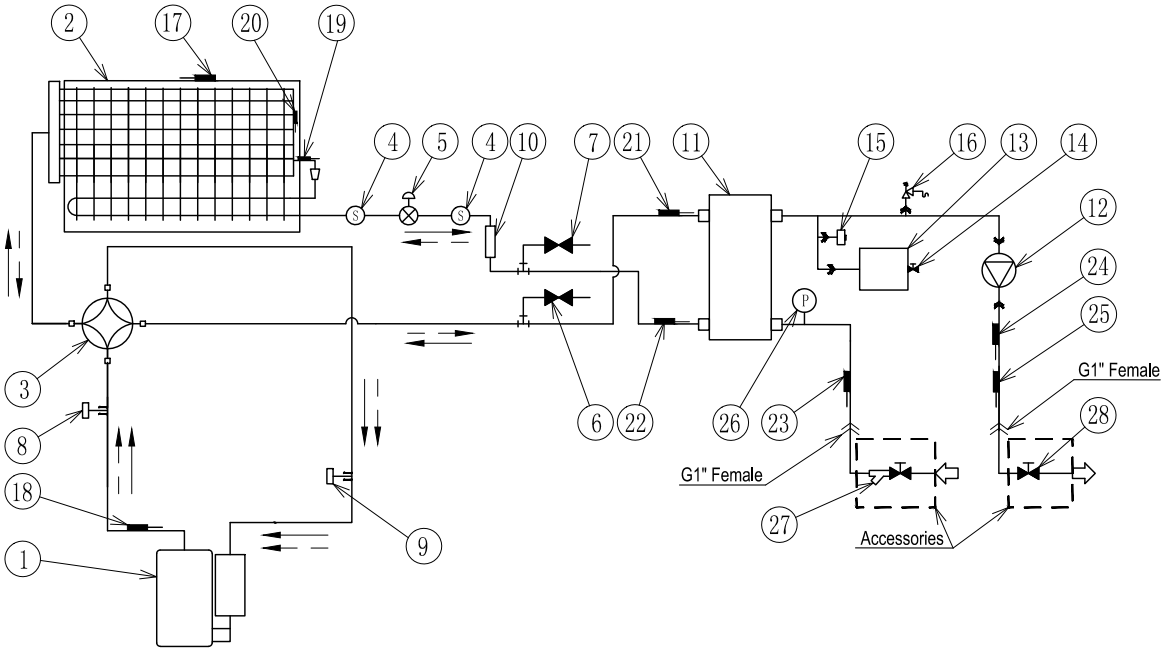

				Refrigerant
Cooling refrigerant flow	Heating refrigerant flow	Water flow (Heating/Cooling)	Flare nut connection	R32

No.	Part name	No.	Part name	No.	Part name	No.	Part name
1	Compressor	9	High Pressure Switch (PSH)	17	Outdoor Unit Ambient Thermistor (Ta)	25	Outlet Water Thermistor (Tow)
2	Heat Exchanger	10	Accumulator	18	Compressor Discharge Gas Thermistor (Td)	26	Water Pressure Sensor (Pw)
3	4-way Reversing Valve and Coil	11	Plate Heat Exchanger	19	Heat Exchanger Liquid pipe Thermistor (Te)	27	Shut-off Valve with Filter
4	Strainer	12	Water Pump	20	Heat Exchanger Liquid pipe Thermistor 2 (Te2)	28	Shut-off Valve
5	Electronic Expansion Valve and Coil	13	Expansion Vessel	21	Gas Refrigerant Pipe Thermistor (Tg)		
6	Refrigerant Check Joint	14	Pressure Adjustment Valve of Expansion Vessel	22	Liquid Refrigerant Pipe Thermistor (TL)		
7	Refrigerant Check Joint	15	Air Purge Valve	23	Inlet Water Thermistor (Tiw)		
8	Low Pressure Switch (PSL)	16	Safety Valve	24	Outlet HP Water Thermistor (TowHP)		

8. Installation

8.1 Installation of Hi-Therma Split Indoor Unit

8.1.1 GENERAL INFORMATION

This manual gives a common description and information for this heat pump air conditioner which you operate as well for other models.

This manual should be considered as a permanent part of the heat pump air conditioning equipment and should remain with the air conditioning equipment.

No part of this publication may be reproduced, copied, filed or transmitted in any shape or form without the permission of Hisense.

Within the policy of continuous improvement of its products, Hisense reserves the right to make changes at any time without prior notification and without being compelled to introducing them into products previously sold. This document may therefore have been subject to amendments during the life of the product.

As a result, some of the images or data used to illustrate this document may not refer to specific models. No claims will be accepted based on the data, illustrations and descriptions included in this manual.

This heat pump air conditioner has been designed for the following temperatures. Please operate the air conditioner within the ranges.

Temperature

		Min.	Max.
Outdoor unit	Space heating	-25°C DB	35°C DB
	Domestic hot water (DHW)	-25°C DB	40°C DB
	Space cooling	5°C DB	46°C DB
Indoor unit	Space heating	15°C	60°C
	Domestic hot water (DHW)	30°C	55°C (75°C*)
	Space cooling	5°C	22°C
	Temperature around	5°C DB	30°C DB
	Water pressure	1 bar	3 bar

DB: Dry Bulb

*: When there is an DHW electric heater mounted in the DHW tank, the setting temperature can reach 75°C.

- Upon receiving this product, inspect it for any shipping damage. Claims for damage, either apparent or concealed, in a written form, should be filed immediately with the shipping company.
- Check the model number, electrical characteristics (power supply, voltage and frequency) and acces-sories to determine if they are correct.
- The standard utilization of the unit shall be explained in these instructions. Therefore, the utilization of the unit other than those indicated in these instructions is not recommended.
- Please contact your local agent, as the occasion arises.
- If you have any questions, please contact your dealer or designated service center of HISENSE.

8.1.2 SAFETY

8.1.2.1 APPLIED SYMBOLS

During normal heat pump system design work or unit installation, greater attention must be paid in certain situations requiring particular care in order to avoid damage to the unit, the installation or the building or property.

Situations that pose a risk to the safety of those in the surrounding area or to the unit itself are clearly indicated in this manual.

A series of special symbols are used to clearly identify these situations.

Pay close attention to these symbols and to the messages following them, as your safety and that of others depends on it.

DANGER

- ***The text following this symbol contains information and instructions relating directly to your safety.***
- ***Not taking these instructions into account will lead to personal injury or death.***

CAUTION

- *The text following this symbol contains information and instructions relating directly to your safety.*
- *Not taking these instructions into account could lead to unit damage.*

NOTE

- *The text following this symbol contains information and instructions that may be use or that require a more thorough explanation.*
- *Instructions regarding inspections to be made on unit parts or systems may also be included.*

Caution, risk of fire!

This appliance is filled with R32, an odourless low burning velocity refrigerant. If the refrigerant is leaked, there is a possibility of ignition if it enters in contact with an external ignitions source.

DANGER

This symbol shows that this equipment uses a low burning velocity refrigerant. If the refrigerant is leaked, there is a possibility of ignition if it enters in contact with an external ignition source.

RISK OF EXPLOSION

The compressor must be stopped before removing the refrigerant pipes. All service valves must be fully closed after pumping down operation.

Symbol	Explanation
	Before installation, read the installation and operation manual, and the wiring instruction sheet.
	Before performing maintenance and service tasks, read the service manual.
	For more information, see the Technical, Installation and Service Handbook.

8.1.2.2 ADDITIONAL INFORMATION ABOUT SAFETY

DANGER

- ***DO NOT CONNECT THE POWER SUPPLY TO THE INDOOR UNIT PRIOR TO FILLING THE SPACE HEATING CIRCUIT (AND DHW CIRCUIT IF IT WERE THE CASE) WITH WATER AND CHECKING WATER PRESSURE AND THE TOTAL ABSENCE OF ANY WATER LEAKAGE.***
- *Do not pour water over the indoor unit electrical parts. If the electrical components are in contact with water a serious electric shock will take place.*
- *Do not touch or adjust the safety devices inside the heat pump indoor unit. If these devices are touched or adjusted, a serious accident can take place.*
- *Do not open the service cover or access inside the indoor unit without disconnecting the main power supply.*
- *In case of fire Turn OFF the main switch, put out the fire at once and contact your service contractor.*
- *It must ensure that the heat pump cannot operate accidentally without water neither with air inside hydraulic system.*

CAUTION

- *Do not use any sprays such as insecticide, lacquer, hair spray or other flammable gases within approximately one meter from the system.*
- *If installation circuit breaker or the unit fuse is often activated, stop the system and contact your service contractor.*
- *Do not make service or inspections tasks by your-self. This work must be performed by a qualified service person.*
- *This appliance must be used only by adult and capable people, having received the technical information or instructions to handle this appliance properly and safely.*
- *Children should be supervised to ensure that they do not play with the appliance.*
- *Do not let any foreign body into the water inlet and outlet piping of the air to water heat pump.*

DANGER

Do not use means to accelerate the defrosting process or to clean, other than those recommended by the manufacturer.

- *The appliance shall be stored in a room without continuously operating ignition sources (for example: open flames, an operating gas appliance or an operating electric heater).*
- *Do not pierce or burn.*
- *Be aware that refrigerants may not contain an odour.*

CAUTION

- *This unit is designed for commercial and light industrial application. If installed in house hold appliance, it could cause electromagnetic interference.*
- *This product contains fluorinated greenhouse gases. Do not vent into the atmosphere.*
  Refrigerant type: R32
  Mass of charged refrigerant: refer to chapter 8.1.
  GWP: 675
  GWP=global warming potential

CAUTION

- *Without reading the installation manual, do not carry out refrigerant piping connection, water piping connection and wiring connection.*
- *Check whether the earth wire connection is correct and firm.*
- *Connect to the fuse of specified capacity.*
  The user should not replace the power cord and this must be conducted by professional repair personnel.
- *If the supply cord is damaged, it must be replaced by the manufacturer, its service agent or similarly qualified persons in order to avoid a hazard.*
- *This appliance can be used by children aged from 8 years and above and persons with reduced physical, sensory or mental capabilities or lack of experience and knowledge if they have been given supervision or instruction concerning use of the appliance in a safe way and understand the hazards involved. Children shall not play with the appliance. Cleaning and user maintenance shall not be made by children without supervision.*
- *The appliance is not to be used by children or person with reduced physical, sensory or mental capabilities, or lack of experience and knowledge, unless they have been given supervision or instruction concerning use of the appliance by a person responsible for their safety. Children should be supervised to insure that they do not play with the appliance.*
- *Means for disconnection from the supply mains, which have a contact separation in all poles that provide full disconnection under overvoltage category III conditions, must be incorporated in the fixed wiring in accordance with the wiring rules.*
- *The appliance shall be installed in accordance with national wiring regulations.*
- *The installation and service of this product shall be carried out by professional personnel, who have been trained and certified by national training organizations that are accredited to teach the relevant national competency standards that may be set in legislation.*
- *Mechanical connectors used indoors shall comply with ISO 14903.*
  When mechanical connectors are reused indoors, sealing parts shall be renewed. When flared joints are reused indoors, the flare part shall be refabricated.
- *Reusable mechanical connectors and flared joints are not allowed indoors.*
- *Disconnect the appliance from its power source during service and when replacing parts.*
- *Heat pump indoor unit, controller and wires should not be installed 3m from the strong electromagnetic wave radiation source, such as medical appliances.*

8.1.3 IMPORTANT NOTICE

8.1.3.1 INFORMATION

- **PLEASE READ THE MANUAL CAREFULLY BEFORE STARTING TO WORK ON THE INSTALLATION OF THE AIR TO WATER HEAT PUMP SYSTEM**. Failure to observe the instructions for installation, use and operation described in this documentation may result in operating failure including potentially serious faults, or even the destruction of the air to water heat pump system.
- Verify, in accordance with the manuals which appear in the outdoor and indoor units, that all the information required for the correct installation of the system is included. If this is not the case, contact with your dealer.
- Hisense pursues a policy of continuous improvement in product design and performance. The right is therefore reserved to vary specifications without notice.
- Hisense cannot anticipate every possible circumstance that might involve a potential hazard.
- This air to water heat pump has been designed for standard water heating for human beings only. Do not use this for other functions that are not included in the master controller.
- No part of this manual may be reproduced without written permission.
- If you have any questions, contact with your dealer.
- Check and make sure that the explanations of each part of this manual correspond to your air to water heat pump model.
- Refer to the models codification to confirm the main characteristics of your system.
- Signal words (NOTE, DANGER and CAUTION) are used to identify levels of hazard seriousness. Definitions for identifying hazard levels are provided in initial pages of this document.
- The operation modes of these units are controlled by the master controller.
- This manual should be considered as a permanent part of the air to water heat pump. It gives a common description of and information for this heat pump indoor unit.
- Keep the water temperature of the system above the freezing temperature.

8.1.3.2 MINIMUM FLOOR AREA REQUIREMENTS

- The following chart and table shows the minimum floor area (A_{min}) required for the installation of an indoor unit from a refrigerant system containing a certain refrigerant charge (m_c) of R32 (A2L refrigerant), and supposing a total room height not lower than 2.2 m. (According to IEC 60335-2-40:2018 and EN 378-1:2016).
- For mc<1.84 kg, IEC 60335-2-40:2018 and EN 378-1:2016 do not establish any minimum floor area restriction. In that case check local regulations to ensure that no hard restrictions may apply.

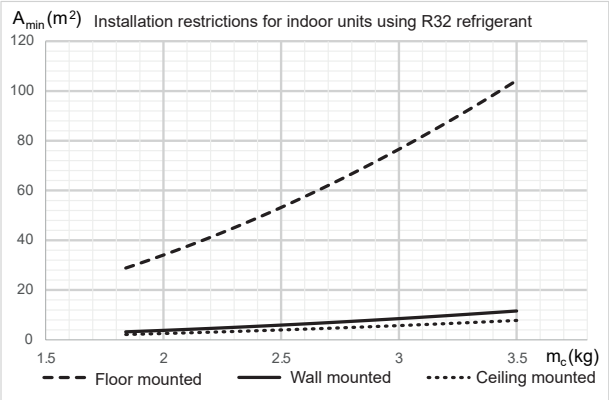

$$A_{min} = (m_c / (2.5 * LFL^{\wedge(5/4)} * h_0)^{\wedge 2} \quad \text{(EQU.1)}$$

- A_{min}: Minimum installation area of an Indoor unit for a given refrigerant charge m_c (kg) and considering the installation height h0 (m^2).
- h0: Installation height of the bottom side of the indoor unit + distance from the indoor unit bottom side to the lowest part for which a refrigerant leak may release to the indoor area.
- m_c: total system refrigerant charge that could be released to the indoor area in case of undetected refrigerant leak.
- LFL: Lower Flammability Limit for R32, 0,307 kg/m^3 as established by EN 378-1:2016 and ISO 817.

Minimum floor area for equipment installed inside			
m_c(kg)	A_{min}(m^2)	A_{min}(m^2)	A_{min}(m^2)
	Floor mounted	Wall mounted	Ceiling mounted
1.84	28.81	3.20	2.14
1.9	30.72	3.41	2.29
2.0	34.04	3.78	2.53
2.1	37.53	4.17	2.79
2.2	41.19	4.58	3.06
2.3	45.02	5.00	3.35
2.4	49.02	5.45	3.65
2.5	53.19	5.91	3.96
2.6	57.53	6.39	4.28
2.7	62.04	6.89	4.61
2.8	66.72	7.41	4.96
2.9	71.58	7.95	5.32
3.0	76.6	8.51	5.70
3.1	81.79	9.09	6.08
3.2	87.15	9.68	6.48
3.3	92.68	10.30	6.89
3.4	98.39	10.93	7.32
3.5	104.26	11.58	7.75

- The A_{min} in the table above is calculated according to the formula (EQU.1) under the following conditions:
- Floor mounted: h0 = 0.6m
- Wall mounted: h0 = 1.8m
- Ceiling mounted: h0 = 2.2m
- For safety, the A_{min} must be calculated according to the actual installation by professionals.

CAUTION

- *Do not charge OXYGEN, ACETYLENE, or other flammable and poisonous gases into the refrigerant because an explosion can occur. It is recommended that oxygen free nitrogen be charged for these types of tests cycle when performing a leakage test or an airtightness test. These types of gases are extremely dangerous.*
- *Insulate the unions and flare-nuts at the piping connection part completely.*
- *Insulate the liquid piping completely to avoid a decrease of performance; if not, it will cause sweating on the surface of the pipe.*
- *Charge refrigerant correctly. Overcharging or insufficient charging could cause a compressor failure.*
- *Check for refrigerant leakage in detail. If a large refrigerant leakage occurred, it would cause difficulty with breathing or harmful gases would occur if a fire were being used in the room.*
- *If the flare nut is tightened too hard, the flare nut may crack after a long time and cause refrigerant leakage.*
- *The heat pump indoor unit is suitable for the floor mounted condition (h_0 = 0.6m) for most installations.*

8.1.4 BEFORE OPERATION

8.1.4.1 GENERAL NOTES

8.1.4.1.1 Selection of the installation location

The indoor unit of the system with air to water heat pump must be installed following these basic requirements:

- The indoor unit is intended to be installed in an indoor place and for ambient temperatures ranging 5~30°C. The ambient temperature around the indoor unit must be higher than 5°C to prevent water from freezing.
- The unit is prepared to be wall mounted (wall support is factory supplied), so make sure that selected wall is flat and is made of a non-combustible surface, strong enough for supporting the indoor unit weight.
- Be sure to maintain the recommended servicing space for future unit servicing and guarantee enough air circulation around the unit (See “5.1 Service space” section).
- Take into account that shut-off valve with filter and shut-off valve (factory supplied) must be installed at the indoor unit inlet and outlet connections.
- Keep water draining provisions. The safety valve is provided with a drain pipe which are located at the drain pan of the unit.
- Protect the indoor unit against the entry of small animals (like rats) which could making contact with the wires, the drain pipe, electrical parts and may damage unprotected parts, and at the worst, a fire will occur.
- Install it in a no-frost environment.
- Do not install the indoor unit in a location with very high humidity.
- Do not install the indoor unit where electromagnetic waves are directly radiated to the electrical box.
- Install the unit in a place where in case of water leakage, any damage to the installation space cannot be produced.
- Install noise filter when the power supply emits harmful noises.
- To avoid fire or explosion, do not install the unit in flammable environment.
- The air to water heat pump must be installed by a service technician. The installation must comply with local and European regulations.
- Try to avoid to put any objects or tools above the indoor unit.

8.1.4.1.2 Unpacking

All units are packed by a cardboard box and plastic bag. Firstly to unpack it, place the unit on the assembly area as close as possible to its final installation location, to avoid damages in transport. Two persons are required.

1. Cut the strapping bands and remove the adhesive tapes.
2. Remove the carton assembly and then the plastic bag around the unit.
3. Remove the indoor unit from the carton and foam base and place it carefully on the floor, as near as possible to its final location.

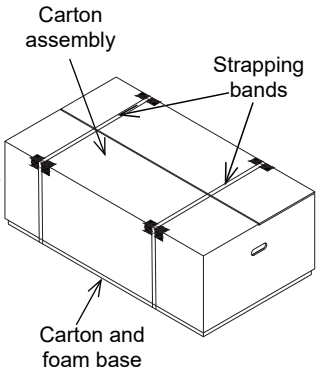

CAUTION

- *Be careful with the Installation and Operation manual and with the factory-supplied accessories located besides the unit.*
- *Two people are required when lifting because of the weight of the unit.*

8.1.4.2 FACTORY-SUPPLIED INDOOR UNIT COMPONENTS

Accessory	Image	Qty.	Remarks
Wall support		1	For hanging the unit on the wall
Gasket		6	Six gaskets for each connections between the indoor unit and shutoff valves (inlet/outlet)
Shut-off valve (G1”)		1	Connect at the water inlet/ outlet of indoor unit, used to shut off the water flow.
Shut-off valve with filter (G1”)		1	Connect at the water inlet/ outlet of indoor unit, used to shut off the water flow and filter impurities in water.
Cable tie		3	Used for wiring binding.
Drain pipe clamp		1	Used for fastening drain hose and drain pipe.
Drain pipe clamp		1	Used for fastening drain hose and drain pipe.
Drain pipe		1	Used for drain hose connection
Adapter tube 1 (Only for 2/2.5HP)	Ø15.88→Ø12.7	1	When using different refrigerant pipelines, it shall be considered to use.
Adapter tube 2	Ø9.53→Ø6.35	1	When using different refrigerant pipelines, it shall be considered to use.
Bolts		2	Used to fix the machine to the wall support
Instruction manual		1	Basic instructions for the installation of the device.

NOTE

- *The previous accessories are supplied inside the packing assembly (besides the indoor unit).*
- *Additional refrigerant piping (field supplied) for connections to outdoor unit needs to be available.*
- *If some of these accessories are not packed with the unit or any damage to the unit is detected, please contact your dealer.*

8.1.5 GENERAL DIMENSIONS

8.1.5.1 SERVICE SPACE

Unit: mm

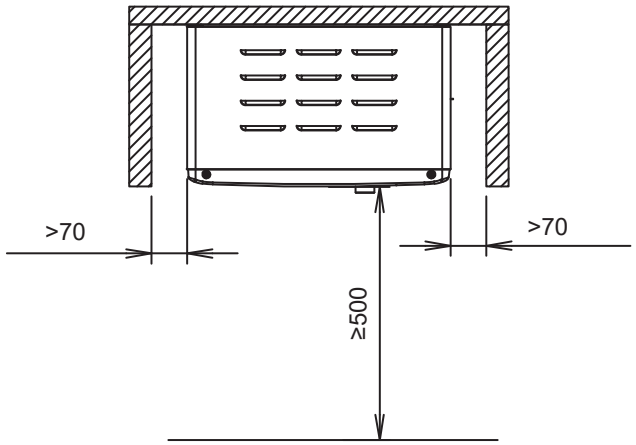

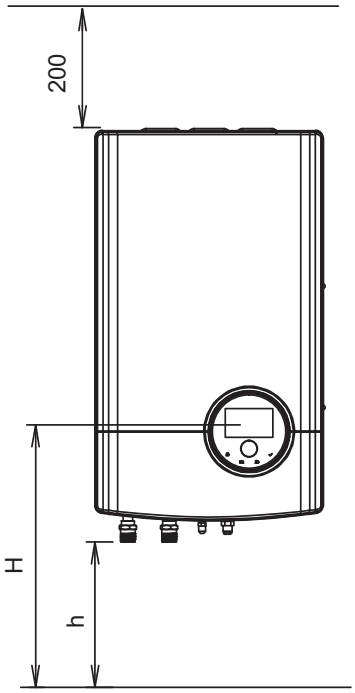

H: 1200~1500 mm
Recommended unit height for proper access to the controller.
h: 350 mm
Minimum unit height for installing the shut-off valves and the first bending pipe line.

8.1.5.2 DIMENSIONAL DATA

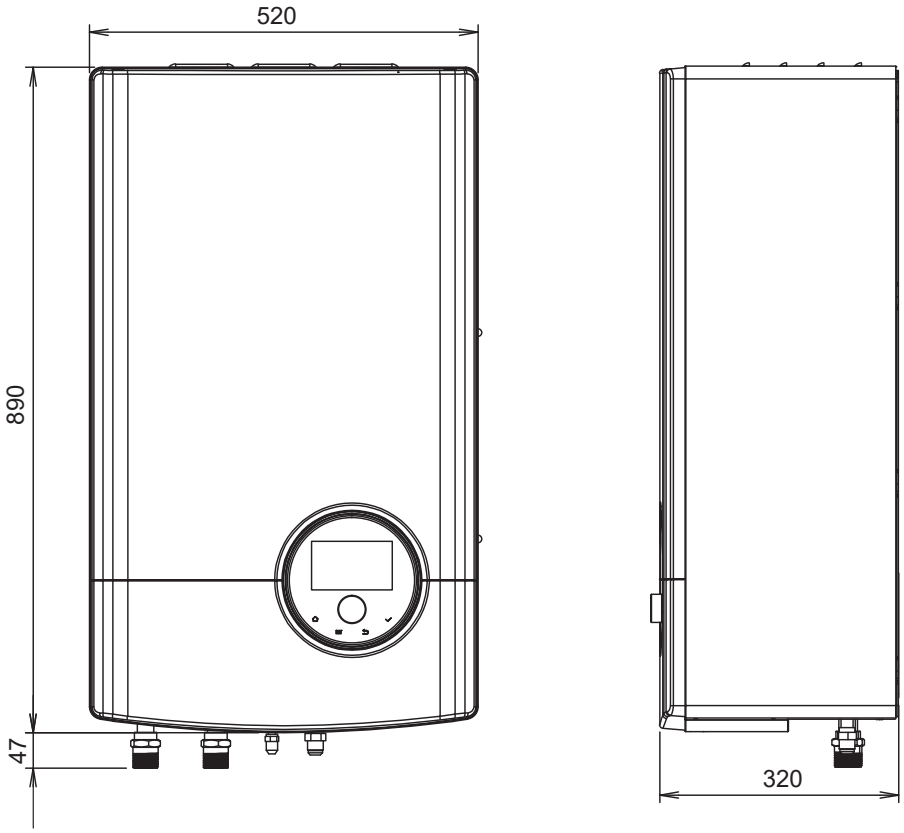

8.1.6 Installation of Hi-Therma Split Indoor Unit

8.1.6.1 MAIN PARTS (DESCRIPTIONS)

No.	Part
1	Indoor unit front panel
2	Indoor unit surrounding panel
3	Master controller & controller frame
4	Piping connections

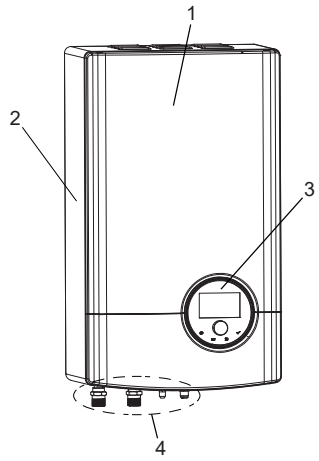

8.1.6.2 REMOVING THE PANELS

If it is necessary to access to the indoor unit components, please follow these operations.

8.1.6.2.1 Removing the front panel

NOTE

The indoor unit front panel needs to be removed for any task inside the indoor unit.

1. Unscrew 1 screw at the bottom of the indoor unit and 2 screws on the top of unit.

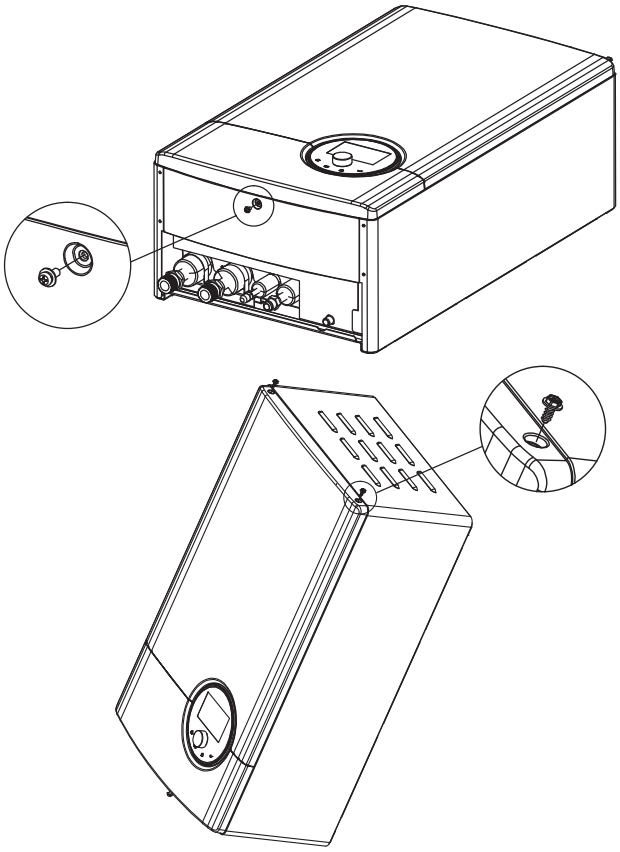

2. Remove the front panel.

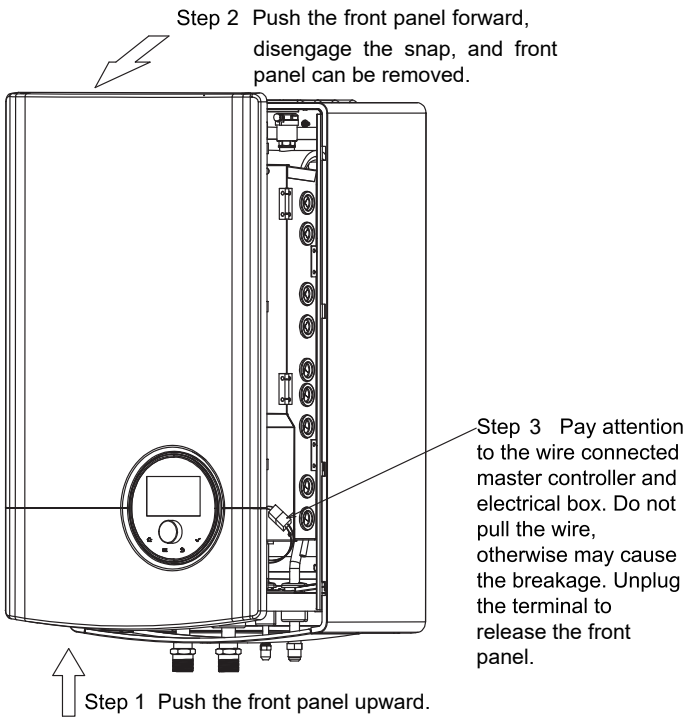

CAUTION

- *Take care with the LCD display of the master controller while removing the front panel.*
- *Be careful not to drop the front panel during operation.*
- *Take care when removing front panel, the parts inside the unit could be hot.*

8.1.6.2.2 Opening the electrical box

DANGER

- ***Disconnect the unit from the power supply before touching any of the parts in order to avoid an electric shock.***

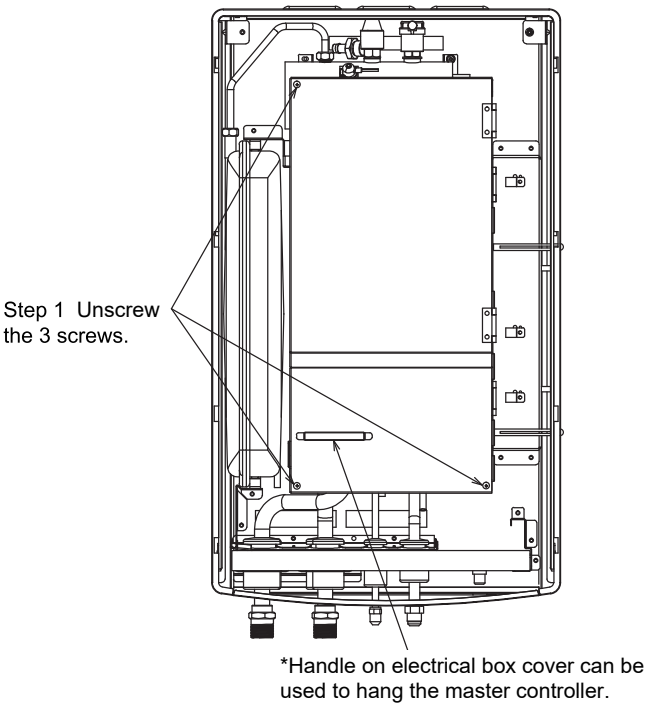

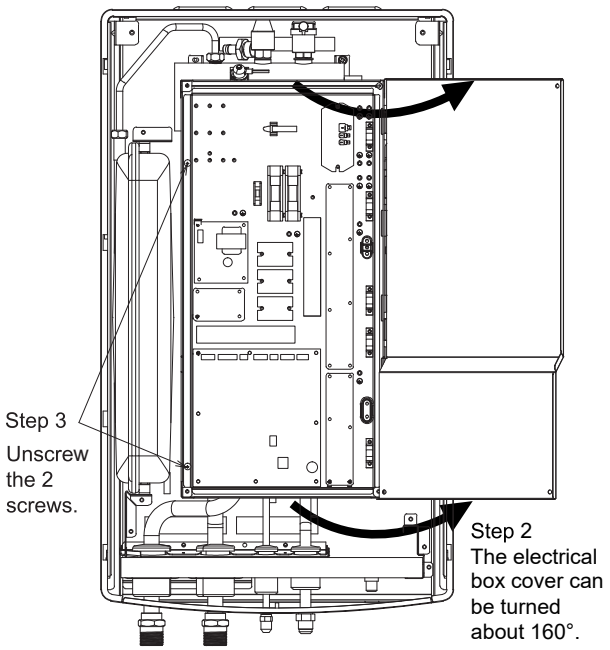

Step 4 The electrical box can be turned about 88°.

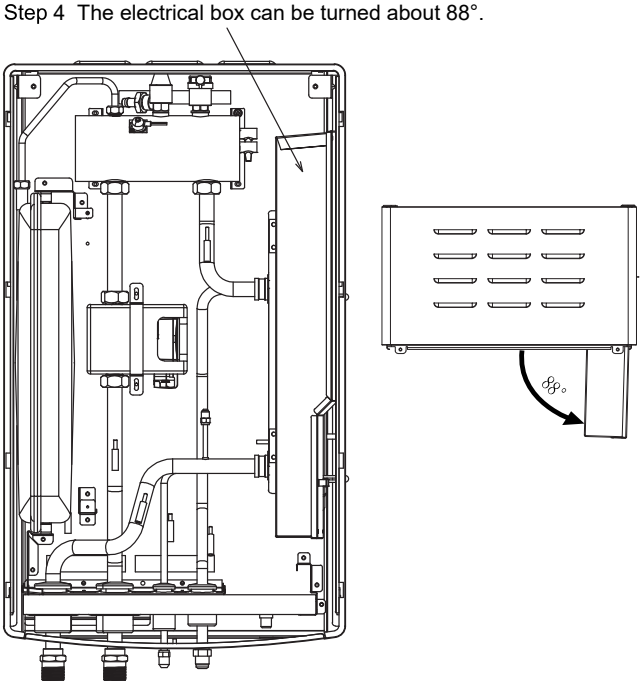

CAUTION

Take care with the electrical box components in order to avoid damaging.

8.1.6.2.3 **Hanging the master controller**

NOTE

The master controller can be hung on the handle of the electrical box cover.

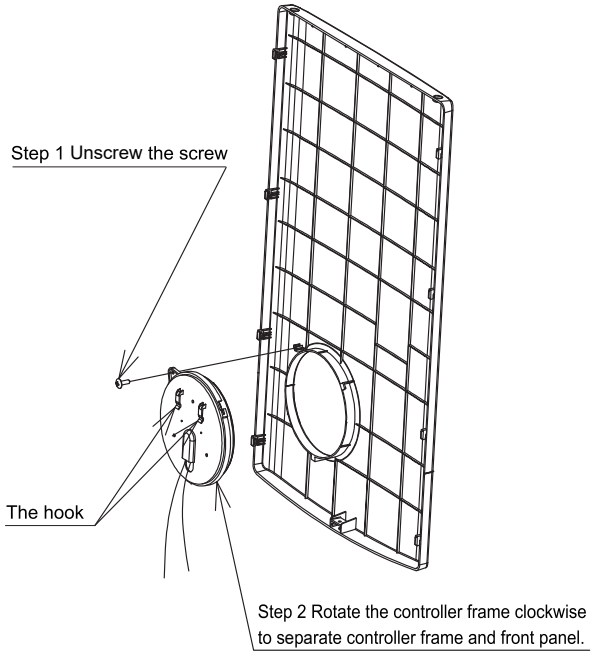

Step 3 Insert the hook into the handle.

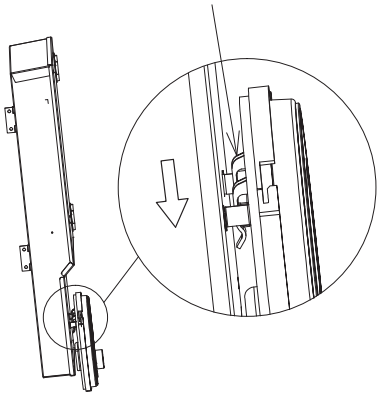

Step 4 Complete hanging.

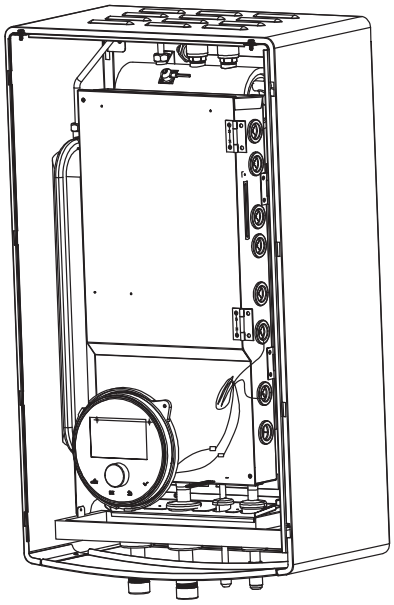

8.1.6.3 **WALL MOUNTING**

NOTE

Installation procedure

1 Wall mounting procedure
2 Water piping connection
3 Drain pipes connection
4 Refrigerant piping connection
5 Power and transmission wiring connection 6 Cover assembly
7 Test and check

Wall mounting procedure

CAUTION

Make sure the wall has adequate strength to hang weight of the indoor unit.

1. Fix the wall support (factory-supplied accessory) to the wall.
   Drill 3 holes according to the circular hole position of the wall support as shown below, and the hole diameter shall meet the requirements of M8 expansion bolts.

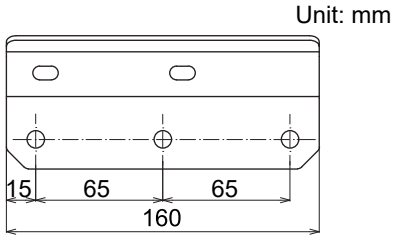

Using 3 M8 expansion bolts Fix the wall support to the wall. Make sure that the wall support is completely levelled.

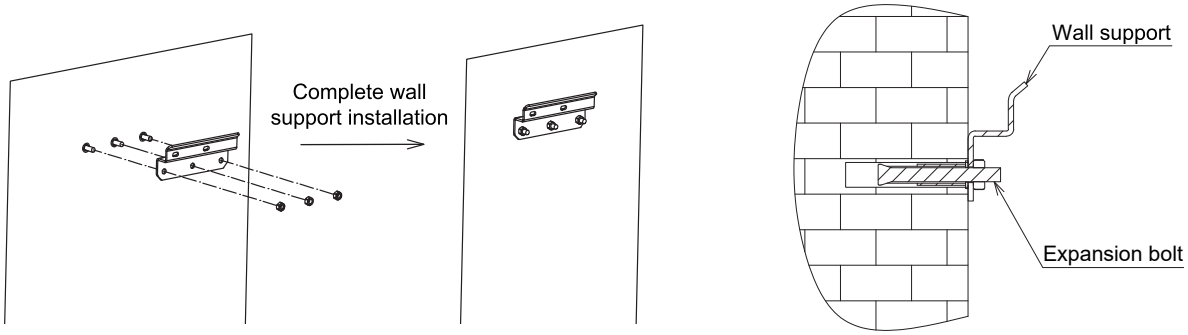

2. Hang the indoor unit on the wall support, using the square hole on the back panel of indoor unit. At least two persons are required in order to lift the unit because of its weight.

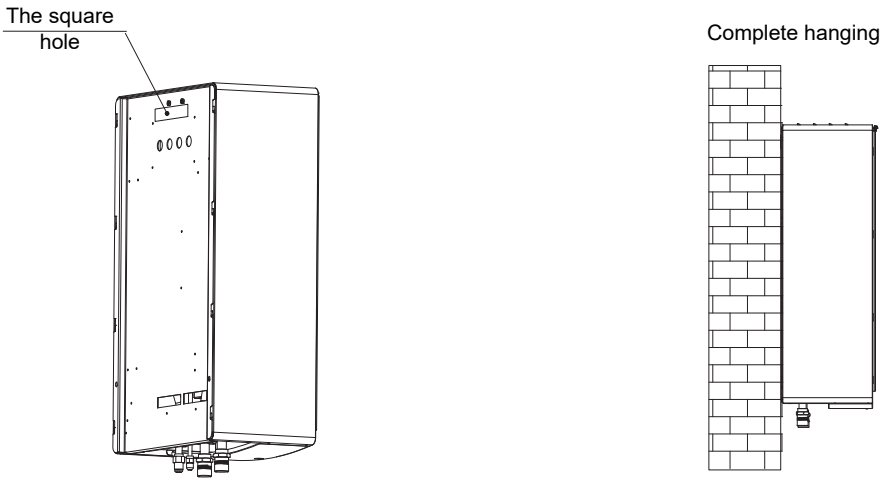

3. Fix the indoor unit to the wall support using the two M5 bolts (factory-supplied accessory).

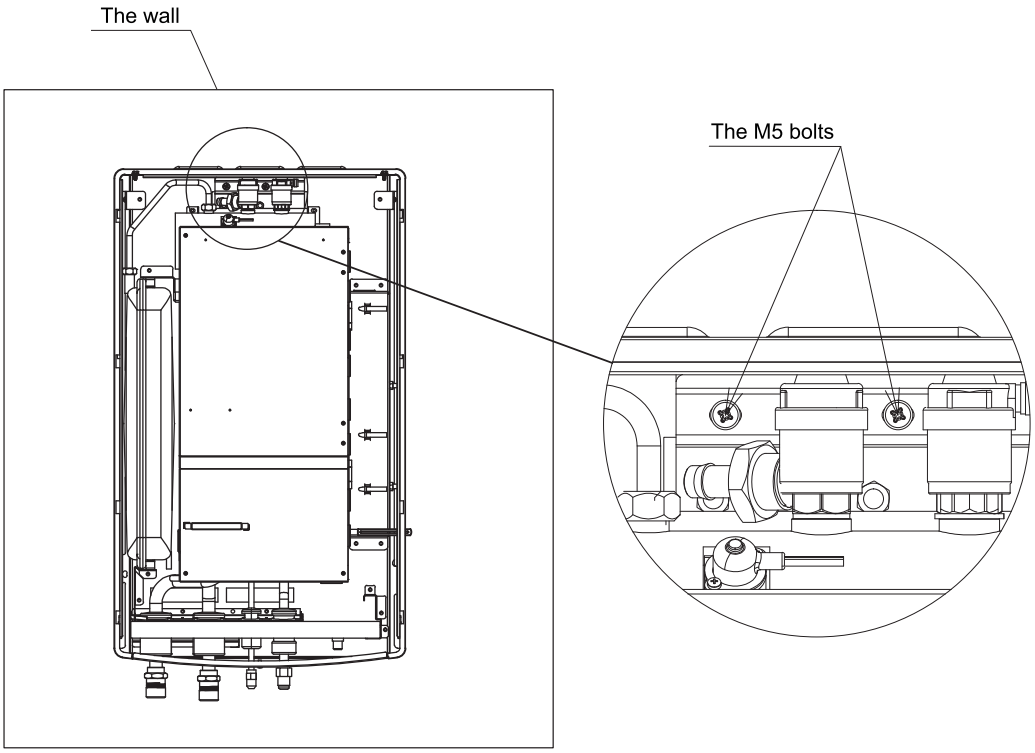

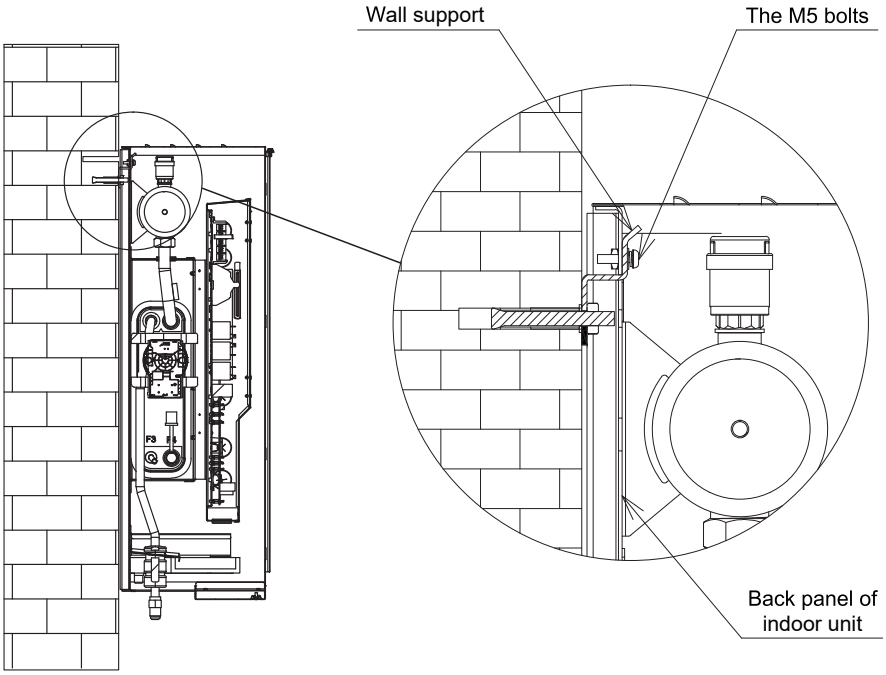

8.1.7 PIPING WORK

Make sure that refrigerant piping installation complies with the legislation EN378 and local legislation.

8.1.7.1 GENERAL NOTES BEFORE PERFORMING PIPING WORK

- Prepare locally-supplied copper pipes.
- Select the piping size with the correct thickness and correct material able to withstand sufficient pressure.
- Select clean copper pipes. Make sure that there is no dust or moisture inside the pipes. Blow the inside of the pipes with oxygen free nitrogen to remove any dust and foreign materials before connecting them.

NOTE

A system with no moisture or oil contamination will give maximum performance and lifecycle compared to that of a poorly prepared system. Take particular care to ensure that all copper piping is clean and dry internally.

- Cap the end of the pipe when pipe is to be inserted through a wall hole.
- Do not put pipes on the ground directly without a cap or vinyl tape at the end of the pipe.

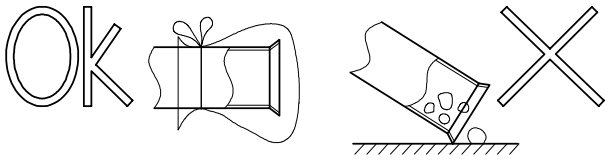

- If piping installation is not completed until next day or over a longer period of time, braze off the ends of the piping and charge with oxygen free nitrogen through a Schrader valve type access fitting to prevent moisture and particle contamination.
- It is advisable to insulate the water pipes, joints and connections in order to avoid heat loss and dew condensation on the surface of the pipes or accidental injures due to excessive heat on piping surfaces.
- Do not use insulation material that contains NH3, as it can damage copper pipe material and become a source of future leakage.
- It is recommended to use flexible joints for the water piping inlet and outlet in order to avoid vibration transmission.
- Refrigerant circuit and water circuit must be performed and inspected by a licensed technician and must comply with all relevant European and national regulations.
- Proper water pipe inspection should be performed after piping work to assure there is no water leakage in the water circuit.

- Location of Refrigerant and Water Pipeline are shown below.

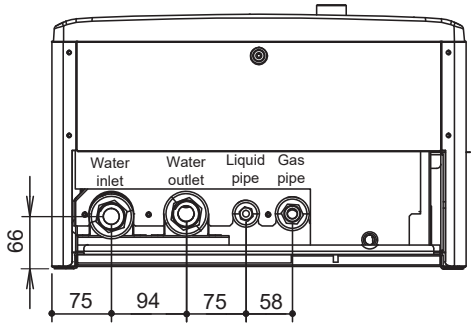

8.1.7.2 REFRIGERANT PIPING CONNECTION

Piping connection size of indoor unit is shown below.

Model	Gas pipe	Liquid pipe
044(2.0HP)	Ø 15.88 (5/8”)	Ø 9.53 (3/8”)
060(2.5HP)		
080(3.0HP)		

Torque required is shown below.

Pipe Diameter	Torque(N•m)
Ø 6.35	14~18
Ø 9.53	33~42
Ø 12.7	50~62
Ø 15.88	63~77

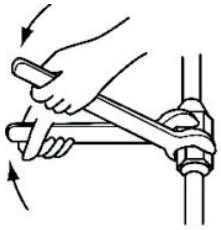

NOTE

Screw up the nut cap by two wrenches. Heat preservation material on site should be used to prevent heat leakage of gas pipe, liquid pipe and connecting nut cap.

8.1.7.3 WATER PIPING CONNECTION

(1) Piping connection size of indoor unit.

Model	Gas pipe	Liquid pipe
044(2.0HP)	G1” (male)	G1” (male)
060(2.5HP)		
080(3.0HP)		

(2) Install shut-off valves

A shut-off valve and a shut-off valve with filter are provided with the unit. For convenience of repair and maintenance, install the shut-off valve with filter on water inlet pipe and the shut-off valve on water outlet pipe of indoor unit as follow.

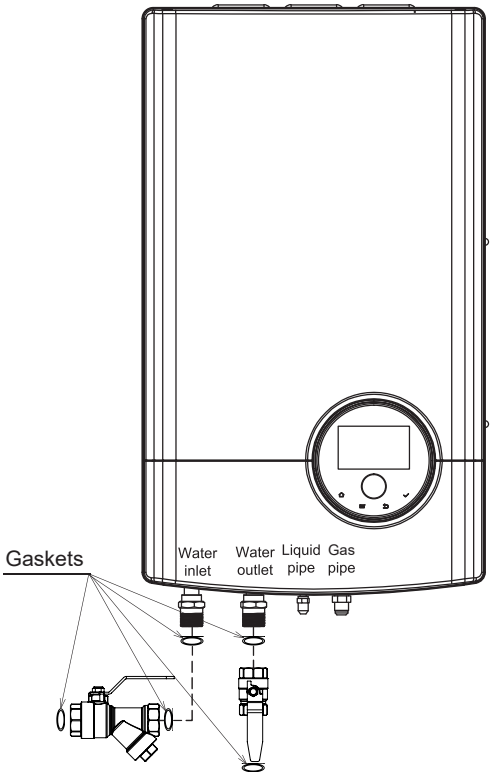

NOTE

The shut-off valve can connect to the water inlet of indoor unit directly. The shut-off valve with filter must be installed at water inlet of indoor unit, and water flow direction and installation direction must be confirmed as shown below. The gasket in accessories can be installed at the two connections of shut-off valve and shut-off valve with filter.

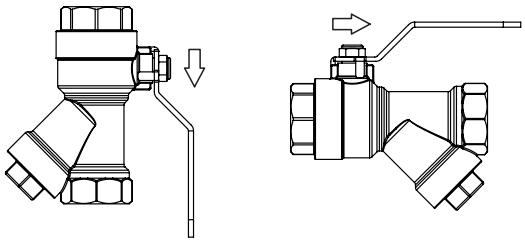

CAUTION

- *Rubber gasket must be mounted (accompanied with the unit), otherwise water leakage may be caused.*
- *Note the location of shut-off valves, and the direction of shut-off valves and drain valve, which are essential to maintenance.*
- *Screw up shut-off valves by using two wrenches.*

(3) Additional water strainer

CAUTION

- *Provide a 50 mesh or more water strainer at the water inlet side of water piping. Otherwise, damage to the plate heat exchanger may occur. In the plate heat exchanger, water flows through a narrow space between the plates. Therefore, there is a possibility that freezing or corrosion may occur if foreign particles or dust clog the flow of water between the plates.*
- *This is not required when cooling mode is not used.*

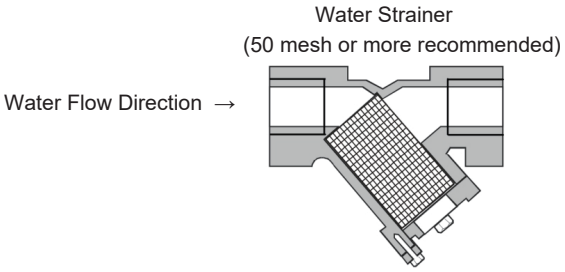

- *The water piping connection needs to be completed after flushing the water system.*

8.1.8 SPACE HEATING AND DHW

8.1.8.1 ADDITIONAL HYDRAULIC NECESSARY ELEMENTS

DANGER

Do not connect the power supply to the unit prior to filling the space heating circuit (and DHW circuit if it were the case) with water and checking water pressure and the total absence of any water leakage.

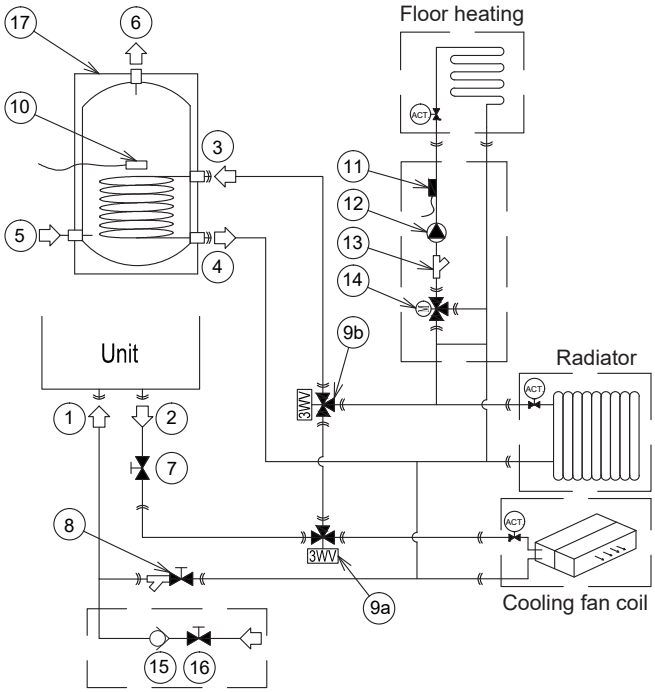

Nature	No.	Part name		
Piping connections	1	Water inlet of the unit		
	2	Water outlet of the unit		
	3	DHW tank inner coil inlet		
	4	DHW tank inner coil outlet		
	5	Water inlet (DHW)		
	6	Water outlet (DHW)		
Factory supplied	7	Shut-off valve		
	8	Shut-off valve with filter		
Optional accessories	9	3-way valve (HESE-3W25A)	9a	3WV Cooling
			9b	3WV DHW
	10	Thermistor (HTS-E1000A, for DHW)		
	11	Thermistor (HTS-E1000A, for Space heating)		
Field supplied	12	Water pump		
	13	Filter		
	14	Mixing valve		
	15	Check valve		
	16	Shut-off valve		
	17	Domestic hot water tank		

As an installation example of space heating / cooling and Domestic hot water (DHW), the following hydraulic elements are necessary to correctly perform the space heating / cooling and DHW water circuit:

- The factory supplied shut-off valve (7) need to be installed at water outlet of the unit, and shut-off valve with filter (8) need to be installed horizontally at water inlet of the unit.
- A water check valve (15) with a shut-off valve (16) must be connected to the water filling point when filling the water circuit. The check valve acts as a safety device to protect the installation.
- A domestic hot water tank (17) has to be installed in combination with the space heating / cooling.
- 3-way valves (HESE-3W25A accessory) (9) must be connected at one point of the water outlet pipe of the installation, used to divert the water circulation for specific functions. As shown in example, connect straight through of 3-way valve to DHW tank inner coil.
- DHW thermistor (10) must be installed to reach the inner wall of the DHW tank and keep in good contact with it. Space heating thermistor (10) must be installed on the metal tube close to space heating, and keep in good contact with it.
- Mixing valve (14) is recommended to use ESBE ARA661, which operation mode is 3-point SPDT. If mixing valve of other brands or models are used, the operation mode must be 3-point SPDT, and power supply must be 220-240V ~ 50Hz. The rotation time can be set in the master controller.

Additionally, the following elements are required for the DHW circuit:

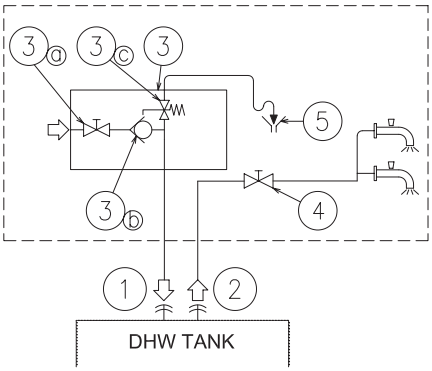

Nature	No.	Part name	
Piping connections	1	Supplementary water inlet of DHW tank	
	2	DHW tank outlet	
Field supplied	3	Pressure and temperature relief valve	
		3a	Shut-off valve
		3b	Water check valve
		3c	Safety valve
	4	Shut-off valve	
	5	Draining	

- **A Shut-off valve (field supplied):**
  The shut-off valve (4) must be connected after the DHW tank outlet (2) in order to make easier any maintenance work.
- A Security water valve (Field-supplied):
  This accessory (3) is a pressure and temperature relief valve that must be installed as near as possible to the Supplementary water inlet of DHW tank (1). It should ensure a correct draining (5) for the discharge valve of this valve. This security water valve should provide the following:
  - Pressure protection
  - Non-return function
  - Shut-off valve
  - Filling
  - Draining

NOTE

The discharge pipe should always be open to the atmosphere, free of frost and in continuous slope to the down side in case that water leakage exists.

In case of a recirculation circuit for the DHW circuit, the following elements are required:

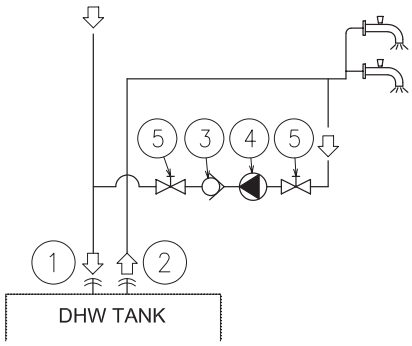

Nature	No.	Part name
Piping connections	1	Supplementary water inlet of DHW tank
	2	DHW tank outlet
Field supplied	3	Water check valve
	4	Water pump
	5	Shut-off valve

- **A Recirculation water pump (field supplied):** This water pump (3) will help to correctly recirculate the hot water to the DHW inlet.
- **A Water check valve (field supplied):** This accessory (3) is connected after the recirculation water pump (4) in order to ensure the nonreturn of water.
- **Two Shut-off valves (field supplied) (5):** One before the recirculation water pump (4) and other after the water check valve accessory (3).

CAUTION

The water check valve shall be confirmed installed in the correct direction. Otherwise, serious damages may occur in the DHW tank.

8.1.8.2 REQUIREMENTS and RECOMMENDATIONS for HYDRAULIC CIRCUIT

- The maximum piping length depends on the maximum pressure availability in the water outlet pipe. Please check the pump curves.
- The unit is equipped with an air purge valve (factory supplied) at the highest location of the unit. If this location is not the highest of the water installation, air might be trapped inside the water pipes, which could cause system malfunction. In that case additional air purge valves (field supplied) should be installed to ensure no air enters the water circuit.
- For heating floor system, the air should be purged by mean of an external pump and an open circuit to avoid air bags.
- When the unit is stopped during shut-off periods and the ambient temperature is very low, the water inside the pipes and the circulating pump may freeze, thus damaging the pipes and the water pump. In these cases, the installer shall ensure that the water temperature inside the pipes does not fall below the freezing point. In order to prevent this, the unit has a self-protection mechanism which should be activated (refer to the Section 9.5 “SETTING OF DIP SWITCHES ON PCB1”).
- Even if the unit is stopped, the water pump may run under some circumstances, i.e, when the anti-freezing function is triggered.
- Keep the unit power on and water system unblocked to prevent water freezing, otherwise an alarm may occur.
- If the water system is blocked, an alarm of water flow will occur to stop the whole system.
- If machine is stopped for a long period of time in winter, drain out water in circuit and water pipes to prevent freezing.
- Check that the water pump of the water circuit works within the pump operating range and that the water flow is over the unit minimum value.
- An additional special water filter is highly recommended to be installed on the space heating (field installation), in order to remove possible particles remaining from brazing which cannot be removed by the field supplied shut-off valve with filter.
- When necessary, put insulation on the pipes in order to avoid heat losses.
- Whenever possible, sluice valves should be installed for water piping, in order to minimize flow resistance and to maintain sufficient water flow.
- Ensure that the installation complies with applicable legislation in terms of piping connection and materials, hygienic measures, testing and the possible required use of some specific components like thermostatic mixing valves Differential pressure overflow valve, etc.
- The maximum water pressure is 3 bar (nominal opening pressure of the safety valve). Provide adequate reduction pressure device in the water circuit to ensure that the maximum pressure is NOT exceeded.
- The water pressure can be read on master controller, detected by the water pressure sensor located at inlet of plate heat exchanger. If water pressure exceeded 3 bar, the water pressure displayed on master controller would flash.
- Ensure that the drain pipes connected to the safety valve and to the air purge valve are properly driven to avoid water being in contact with unit components.
- Make sure that all field supplied components installed in the piping circuit can withstand the water pressure and the water temperature range in which the unit can operate.
- The units are conceived for exclusive use in a closed water circulation.
- The internal air pressure of the expansion vessel will be adapted to the water volume of the final installation (factory supplied with 1 bar of internal air pressure).
- Drain taps must be provided at all low points of the installation to permit complete drainage of the circuit during servicing.

8.1.8.3 **WATER FILLING**

(1) Check that a water check valve (field supplied) with a shutoff valve (field supplied) is connected to the water filling point (water inlet connection) for filling the hydraulic circuit (see “8.1 Additional hydraulic necessary elements).

(2) Make sure all the valves are open (water inlet/outlet shut-off valves and the rest of valves of the water circuit installation components).

(3) Ensure that the air purge valve of the unit is open when installation (turn the screw cap of air purge valve twice at least).

(4) Check that the drain pipes connected to the safety valve (keep the outlet of drain pipes located in the drain pan) are correctly connected to the general draining system. The safety valve is later used as an air purging device during the water filling procedure.

(5) Fill the water circuit with water until the pressure displayed on the controller reaches 2.0 ± 0.2 bar. During all the operation conditions, the normal pressure range of water circuit is 1 ~ 2.5 bar.

NOTE

While the system is being filled with water, it is highly recommended to operate the safety valve manually so as to help with the air purging procedure.

(6) Remove as much air from inside the water circuit as possible through the air purge valve and other air vents in the installation (fan coils, radiators...).

(7) There are two methods to start the air purge procedure:

a. Using the master controller to start air purge. (Refer to the master controller manual)

b. Using DSW4-1 of the PCB1:
DSW4-1 ON: Start air purge
DSW4-1 OFF: Stop air purge

(8) If a little quantity of air is still remaining in the water circuit, it will be removed by the automatic air purge valve of the unit during the first hours of operation. Once the air in the installation has been removed, a reduction of water pressure in the circuit is very likely to occur. Therefore, additional water should be filled by booster pump until water pressure returns to approximate 2.0 bar.

NOTE

- *The unit is equipped with an automatic air purge valve (factory supplied) at the highest location of the unit. Anyway, if there are higher points in the water installation, air might be trapped inside water pipes, which could cause system malfunction. In that case, additional air purge valves (field supplied) should be installed to ensure no air enters into the water circuit. The air purge valve should be located at points which are easily accessible for servicing.*
- *The water pressure indicated on the master controller may vary depending on the water temperature (the higher temperature, the higher pressure). Nevertheless, it must remain above 1 bar in order to prevent air from entering the circuit.*
- *Fill in the circuit with tap water. The water in the heating installation must comply with EN directive 98/83 EC. Non-sanitary controlled water is not recommended (for example, water from wells, rivers, lakes, etc.) .*
- *The maximum water pressure is 3 bar (nominal opening pressure of the safety valve). Provide adequate reduction pressure device in the water circuit to ensure that the maximum pressure is NOT exceeded.*
- *For heating floor system, air should be purged by means of an external pump and an open circuit to prevent the formation of air pockets.*
- *Check carefully for leaks in the water circuit, connections and circuit elements.*
- *During water filling, it is necessary to ensure that water enters the unit from the water inlet to ensure that all water passes through the shut-off valve with filter to filter impurities, otherwise it may block the components inside the unit.*

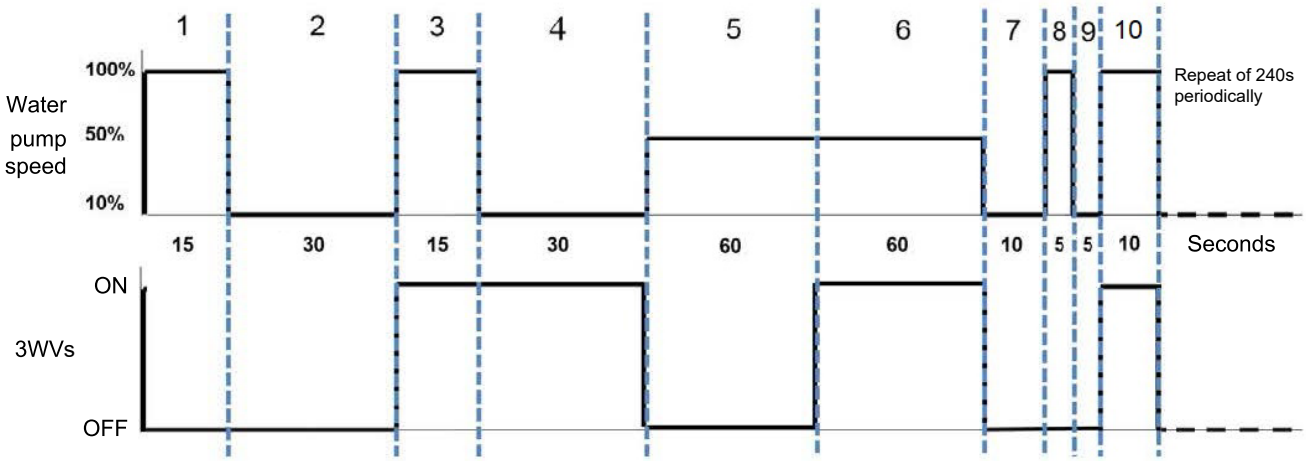

NOTE

- The unit will stop for at least 6 min before starting next air purge cycle.

(9) Check Water Volume:
The unit has a built-in 8L expansion vessel, and default initial pressure is 1 bar. To ensure the unit works normally, the initial pressure of expansion vessel should be adjusted according to the circulated water volume.

- The minimum water volume in circulation system is 147L at least. In most cases, this minimum volume will be appropriate.
- Use water volume checklist below to decide whether initial pressure of expansion vessel needs to be adjusted.
- Use water volume checklist to confirm the total volume of water in installation system is below the allowed maximum water volume.
- Installation height difference: height difference between highest point of water circulation and the unit. If the unit is mounted at the highest point, above all water pipes, the installation height is deemed to be 0 m.
- Calculate initial pressure of expansion vessel. Decide initial pressure (Pg) according to the maximum installation height difference (H), seen below:

$$Pg=H/10+0.3$$

Unit: H (m), Pg (bar)

- The process of calculating allowed maximum water volume in whole circulation is:
  - Calculate maximum water volume corresponding to initial pressure Pg by using maximum water volume curve as shown below.
  - Confirm the total maximum water volume in water circulation is smaller than above value. Otherwise, the expansion vessel in the unit is smaller for system.

NOTE

- *0.3 bar is the minimum initial pressure and 1.5 bar is the maximum initial pressure of expansion vessel set outside the factory.*
- *When initial pressure in expansion vessel is set as 0.3 bar at minimum, the water quantity required by system is higher than the limit value, it may be considered replacing expansion vessel with bigger volume.*

Water Volume Checklist

	Installation height difference (a)	Water Volume	
		≤220L	>220L
Safety Valve (3 bar)	≤7m	No need to adjust initial pressure of expansion vessel	Things need to do : Must reduce initial pressure. Calculate it based on the section “Check water volume”. Ensure water volume is lower than allowed maximum water volume (using the figures below).
	>7m	Things need to do : Must increase initial pressure. Calculate it based on the section “Check water volume”. Ensure water volume is lower than allowed maximum water volume (using the figures below).	The expansion vessel is too small to install. (It needs proper expansion vessel or use safety valve with high activated pressure that is supplied from local place)

Maximum Water Volume Curve Graph

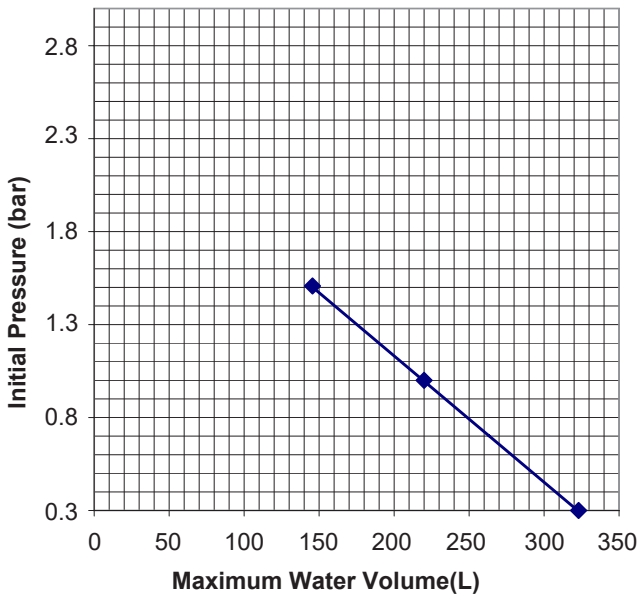

8.1.8.4 DHW TANK SELECTION AND INSTALLATION

NOTE

- *This DHW tank is designed for heat pump type heating system. DHW shall be selected according to the requirements in this instruction and on-site use requirements.*
- *If the selection, installation and wiring are not carried out according to the requirements in this instruction, we would not be responsible for the problems caused by the DHW tank.*
- *Hot water may cause serious burns. Test water temperature with hands. Use after the water is mixed till proper temperature.*
- *Connecting of water pipe with tap water pipe should be operated by qualified staff using proper piping material according to local regulations and standards.*
- *When the high domestic hot water temperature can be a potential risk for human injuries, a mixing valve (field supplied) shall be installed at the hot water outlet connection of the DHW tank. This mixing valve shall secure that the hot water temperature at the hot water tap never rise above a set maximum value. This maximum allowable hot water temperature shall be selected according to the applicable legislation.*

8.1.8.4.1 DHW tank selection

When selecting a tank for DHW operation, take into consideration the following points:

- The volume of the tank has to meet with the daily consumption in order to avoid stagnation of water.
- Fresh water must circulate inside the DHW tank water circuit at least one time per day during the first days after the installation has been performed. Additionally, flush the system with fresh water when there is no consumption of DHW during long periods of time.
- Try to avoid long runs of water piping between the tank and the DHW installation in order to decrease possible temperature losses.
- If the domestic cold water entry pressure is higher than the equipment's design pressure, a adequate pressure reducer must be installed to ensure that the maximum pressure is NOT exceeded.

1 Storage capacity

The storage capacity of the DHW tank depends on the daily water demand and the combination method. The daily water demand is estimated with the following calculation formula for consumption:

$$D_i(T)= D_i(60\ °C) \times (60-T_i / T-T_i)$$

Where:

Di (T):	Water demand at T temperature
Di (60°C):	Domestic hot water demand at 60 °C
T:	Temperature of the DHW tank
Ti:	Temperature of the inlet cold water

- Calculation of Di (60 °C):

The standard consumption, expressed in daily litres per person and determined by technical installation regulations of each country, is used to calculate the domestic hot water demand at 60 °C, Di(60 °C). This quantity is then multiplied by the expected number of users of the installation. In the following example, the domestic hot water demand at 60 °C has been considered as 30 litres per person, in a detached house with 4 residents.

- Calculation of T:

The temperature of the DHW tank refers to the temperature of the accumulated water inside the tank, prior to operation. This temperature is usually between 45 °C and 65 °C. It has been considered as 45 °C in this example.

- Calculation of Ti:

The temperature of the inlet cold water refers to the temperature of the water being supplied to the tank. Since this temperature is usually between 10 °C and 15 °C, it has been considered as 12 °C in this example.

- Example:

Di(T)= 30 x 4 x (60-12 / 45-12) = 174.5 litres/day

174.5 x 2(*) = 349 litres/day approximate demand of hot water

NOTE

(*) It is recommended to multiply the calculated consumption by two, in case that the installation is in a detached house. This is done to ensure a steady supply of hot water. In the case of a multifamily installation, it is not necessary to increase the forecast of hot water demand, given the lower simultaneity factor.

2 Coil Face Area

The coil face area is a key parameter for DHW tank. To improve the heating efficiency, the coil face area should be adjusted according to the capacity.

The coil face area should be no less than the values listed in the table below.

Storage Capacity(L)	100	150	200	250	300
Coil Face Area(m^2)	1.5	1.5	1.8	1.8	2.0

NOTE

Smaller coil face area will lead to worse heating efficiency. In that condition, the heat pump will start and stop frequently which causes more time and more power consumption to heat up the DHW tank.

3 Structural Drawings

The typical structure of the DHW tank is shown as below (only for example):

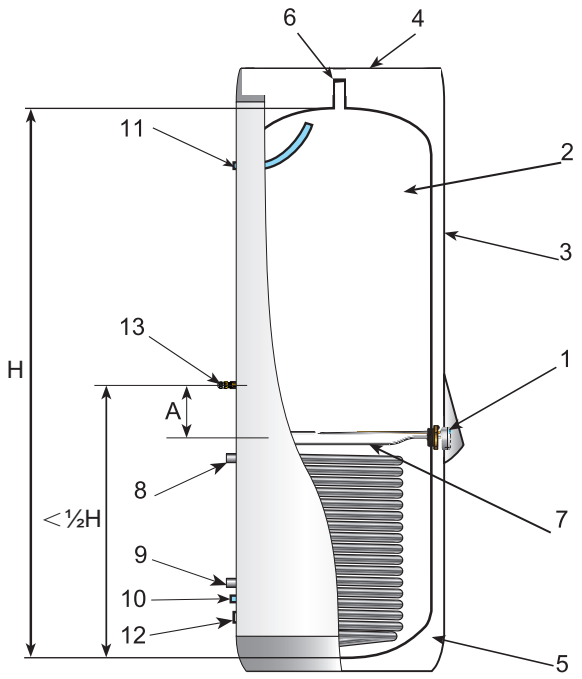

Ref.	Name
1	Control panel
2	Storage tank
3	External covering
4	Top covering
5	Thermal insulation
6	Temperature pressure valve connection port
7	DHW electric heater
8	DHW tank inner coil inlet
9	DHW tank inner coil outlet
10	DHW tank water inlet
11	DHW tank water outlet
12	Drainage outlet
13	Thermistor for DHW

For different storage capacity, the structural design of the DHW tank may be different. The parameters of the typical structure shown in the left are recommended as follows:

Ref.	Recommended value(mm)*
A	Min.150

*Please check and adjust according to the actual situation.

NOTE

(1) *Thermistor for DHW*

① *The DHW tank including the thermistor, the DHW electric heater and the DHW tank inner coil must be designed and installed in accordance with the local regulation.*

② *The position of the thermistor is very important. The reasonable position will help to ensure the detection accuracy of the DHW emperature. It is related to the operation of the heat pump.*

(2) *DHW electric heater*

① *The electric heater is necessary to heat up the DHW tank in the following conditions:*

- *Supplement the heat pump to heat up the DHW tank when the heating capacity of the heat pump is insufficient in low ambient temperature.*
- *Heat up the DHW tank when the operating conditions exceed the limitation, see details in Section 1 "GENERAL INFORMATION".*

② *The capacity of the DHW electric heater is related to the storage capacity of the DHW tank, and should be selected according to the following demand.*

- *Larger capacity of the DHW electric heater is beneficial to heat up the DHW tank, but will consume more power, while smaller capacity of the electric heater will cost more time to heat up the DHW tank.*

CAUTION

- *The temperature pressure valve and the temperature protection device (covered by the control panel) must be installed according to local regulation and performed by qualified professionals referring to Section "8.4.2 Safety device".*

8.1.8.4.2 **Safety device**

1 Temperature pressure valve

A temperature pressure valve which fit with local national requirements should be installed together with DHW tank to avoid the excessive higher temperature and pressure.

- Temperature pressure valve must be tightly connected with drainage pipe. Drainage pipe must be connected as shown below and introduced to building down corner (The water temperature in drainage pipe may be high, note burns).
- Temperature pressure valve in DHW tank can not be connected for other purposes.
- Check temperature pressure valve once half a year. When checking, open temperature pressure valve handle (seen below), temperature pressure valve will smoothly drain water out. The water temperature may be high, note burns. Reset after it is errorless. If drainage fails, contact local dealer for repair.
- Temperature pressure valve and its drainage pipe must keep smooth and not blocked.

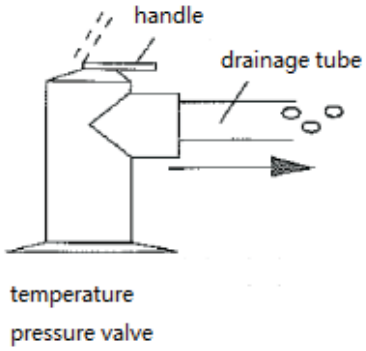

CAUTION

- *If DHW tank is not used for more than 2 weeks, a certain amount of hydrogen will gather in DHW tank. It is recommended to open temperature pressure valve handle or water outlet faucet for several minutes to release hydrogen. However, do not open hot water faucet in dishcleaning machine and washing machine, etc. When hydrogen is released, do not make open flame or operate other electrical apparatus. When gas is released, releasing sound will be heard.*
- *Temperature pressure valve is used to prevent too high temperature in DHW tank (> 94°C, recommended) and water pressure (> 0.85MPa, recommended).*

2 Temperature protection switch

- When using the DHW electric heater, an Auto Restore Temperature Protection Switch (THe2) has to be installed to prevent the DHW temperature from being heated uncontrollable. When DHW temperature exceeds the protection value, the temperature protection switch opens, and auto restores when DHW temperature reduces below the protection value. The protection value can be selected according to temperature requirement of DHW. The recommended protection value is 80°C.
- Temperature Protection Switch / Temperature fuse (THe1) is connected in the DHW electric heater power supply circuit, which can directly cut off the power supply of DHW electric heater when DHW temperature exceeds the protection value.
  The recommended protection value is 90°C.
- The detail wiring diagram of DHW tank is shown in section “9.3.3 Wiring of DHW”.

CAUTION

- *Do not install DHW electric heater without temperature protection device.*
- *Electrical box cover must be opened by qualified electrician. Power off before open electrical box cover.*

8.1.8.4.3 **DHW tank installation**

NOTE

- *Recommend installing this equipment to balcony or outdoor at temperature from 0°C to 43°C.*
- *DHW tank is mounted near floor drain to connect temperature pressure valve drainage pipe.*
- *Do not install DHW tank in place with corrosive gas.*
- *Installation location is free from frosting.*
- *Installation location must bear weight of DHW tank containing water.*
- *Ensure dimension of water pipe is above 1 inch (recommend DN40 water pipe), provide enough volume to pipeline and reduced resistance in pipeline system.*
- *DHW tank is located in a place that is convenient for repair and ensure electrical box is open.*
- *No accumulated water around installation location.*
- *Arrange filter at water inlet pipe, preventing domestic water contaminated by impurities.*
- *Ensure DHW tank is full of water before energizing.*

Install DHW tank

(1) Check DHW tank for complete accessories.

(2) When mounted on ground, ensure the bottom of DHW tank is flat and vertically. If mounted in bath room where water exists, recommend installing on a foundation higher than ground, preventing the bottom being soaked by water.

(3) To ensure the measurement accuracy, the DHW tank thermistor should be coated with thermal grease. The water proof cable gland (field supplied) is recommended to secure the sensor firmly. The DHW tank sensor must be installed to reach the inner wall of the DHW tank and keep in good contact with it.

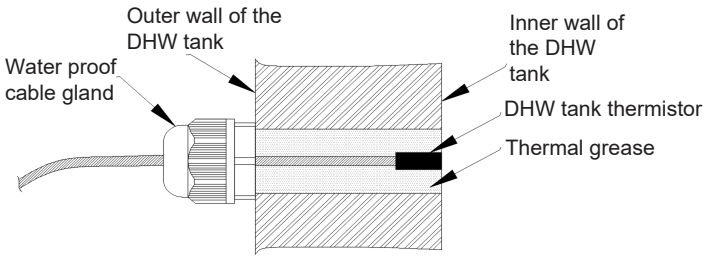

CAUTION

- *DHW tank supplies hot water from tap water. Domestic hot water is only used when tap water is connected.*
- *For safety, do not add ethylene glycol into water circulation. If added, water will be contaminated when heat exchanger coil leaks.*
- *When water hardness is more than 250-300 ppm, recommend using softened water to reduce DHW tank scale.*
- *Immediately flush DHW tank with fresh water after installation. Flush once every day in first five days of installation.*
- *Try to avoid long runs of water piping between the tank and the DHW installation in order to decrease possible temperature losses.*
  If the domestic cold water entry pressure is higher than the DHW tank's design pressure, a pressure reducer must be fitted.
- *After used for a while (depend on local water quality and use frequency), clean DHW tank and remove scales.*
  a. *Power off and close water inlet valve.*
  b. *Open water outlet valve and drainage valve to empty DHW tank.*

  CAUTION

  When scales are removed, temperature in DHW tank may be a little high, it should prevent burns or drainage equipment damaged.

  c. *Close drainage valve after cleaning several minutes with water inlet valve opened. Ensure effluent water is closed after DHW tank is full of water. Power on and get back to work.*

8.1.8.5 WATER CONTROL

It is necessary to analyse the quality of water by checking pH, electrical conductivity, ammonia ion content, sulphur content, and others. The following is the recommended standard water quality.

Item	Chilled water system		Tendency (1)	
	Circulating water (20°C less than)	Supply water	Corro-sion	Depos-its of scales
Standard Quality pH (25 °C)	6.8 ~ 8.0	6.8 ~ 8.0	●	●
Electrical Conductivity (mS/m) (25 °C) {μS/cm} (25 °C) (2)	Less than 40 Less than 400	Less than 30 Less than 300	●	●
Chlorine Ion (mg Cl^{-}/l)	Less than 50	Less than 50	●	
Sulphur Acid Ion (mg H SO^{-}/l)	Less than 50	Less than 50	●	
The amount of Acid consumption (pH 4.8) (mg $CaCO_3$/l)	Less than 50	Less than 50		●
Total Hardness (mg $CaCO_3$/l)	Less than 70	Less than 70		●
Calcium Hardness (mg $CaCO_3$/l)	Less than 50	Less than 50		●
Silica L (mg SIO_2/l)	Less than 30	Less than 30		●
Reference Quality Total Iron (mg Fe/l)	Less than 1.0	Less than 0.3	●	●
Total Copper (mg Cu/l)	Less than 1.0	Less than 0.1	●	
Sulphur Ion (mg $S2^{-}$/l)	It shall not be detected		●	
Ammonium Ion (mg NH_4+/l)	Less than 1.0	Less than 0.1	●	
Remaining Chlorine (mg Cl/l)	Less than 0.3	Less than 0.3	●	
Floating Carbonic Acid (mg CO_2/l)	Less than 4.0	Less than 4.0	●	
Index of Stability	6.8 ~ 8.0	-	●	●

NOTE

- *(1) The mark "●" in the table means the factor concerned with the tendency of corrosion or deposits of scales.*
- *(2) The value showed in "{}" are for reference only according to the former unit.*

8.1.9 Electrical and control settings

8.1.9.1 General check

(1) Ensure all electrical apparatus used on site (power switch, circuit breaker, lead, conduit and terminal board) are selected according to technical manual and national and local codes. Wiring must be made according to national and local codes.

(2) Check voltage is within rated voltage ± 10%. In case of low voltage, system will not start. In case of high voltage, electrical parts will be burnt out.

(3) Confirm earth wire is connected.
Use wires which are not lighter than the polychloroprene sheathed flexible cord (code designation 60245 IEC 57).

Model	Power supply	Operation mode	Max. current (A)	Power supply cables EN60335-1	Transmitting cables EN60335-1	CB (A)	ELB (No. of poles/A/mA)
AHM-(044/060/080) HCDSSA	220-240V ~ 50/60Hz	Without DHW electric heater	16	3 x 2.5 mm² + GND	2 x 0.75 mm² + GND	20	2/20/30
		With DHW electric heater	31	3 x 6.0 mm² + GND		40	2/40/30

CB: Air circuit breaker.
ELB: Earth leakage breaker.

CAUTION

- ***Turn OFF the main power switch of the indoor unit and the outdoor unit and wait for more than 10 minutes before electrical wiring work or a periodical check is performed.***
- ***The data corresponding to DHW electric heater is calculated in combination with the domestic hot water tank with 3kW DHW electric heater. The DHW electric heater which power is equal or lower than 3kW, can be drived directly by indoor unit. As for the DHW electric heater which power is over 3kW, the unit can only provide control signal.***

NOTE

(1) *Field wiring shall be in conformity to local laws and regulations, and all wiring operations must be performed by qualified professionals.*

(2) *Refer to relevant standards for Above-noted power supply cables size.*

(3) *Where power supply cable is connected through junction box in series, be sure to determine the total current and choose wires based on the table below. Selection according to EN 60335-1.*

Current i (A)	Wire size (mm^2)
i ≤ 6	2.5
6 < i ≤ 10	2.5
10 < i ≤ 16	2.5
16 < i ≤ 25	4
25 < i ≤ 32	6
32 < i ≤ 40	10
40 < i ≤ 63	16
63 < i	※1

※ 1: In the case that current exceeds 60A, do not connect cables in series.

(4) *As a minimum, the chosen wires shall not be lighter than the polychloroprene sheathed flexible cord (code designation 60245 IEC 57).*

(5) *The wiring specifications for weak current transmission circuit shall not be lower than that for RVV(S)P shielded wires or equivalent, and the shielding layer shall be grounded.*

(6) *A switch that can ensure all-pole disconnection shall be installed between power supply and air conditioning unit in such a manner that the contact spacing shall not be less than 3 mm.*

(7) *Once the power cord is damaged, the dealer or the professionals from designated maintenance department must be contacted in a timely manner for repair and replacement.*

(8) *For the installation of power cord, the earth wire must be longer than the current-carrying conductor.*

8.1.9.2 **WIRING**

1. The electrical box inner wiring and wire fixing shall be operated as shown below.

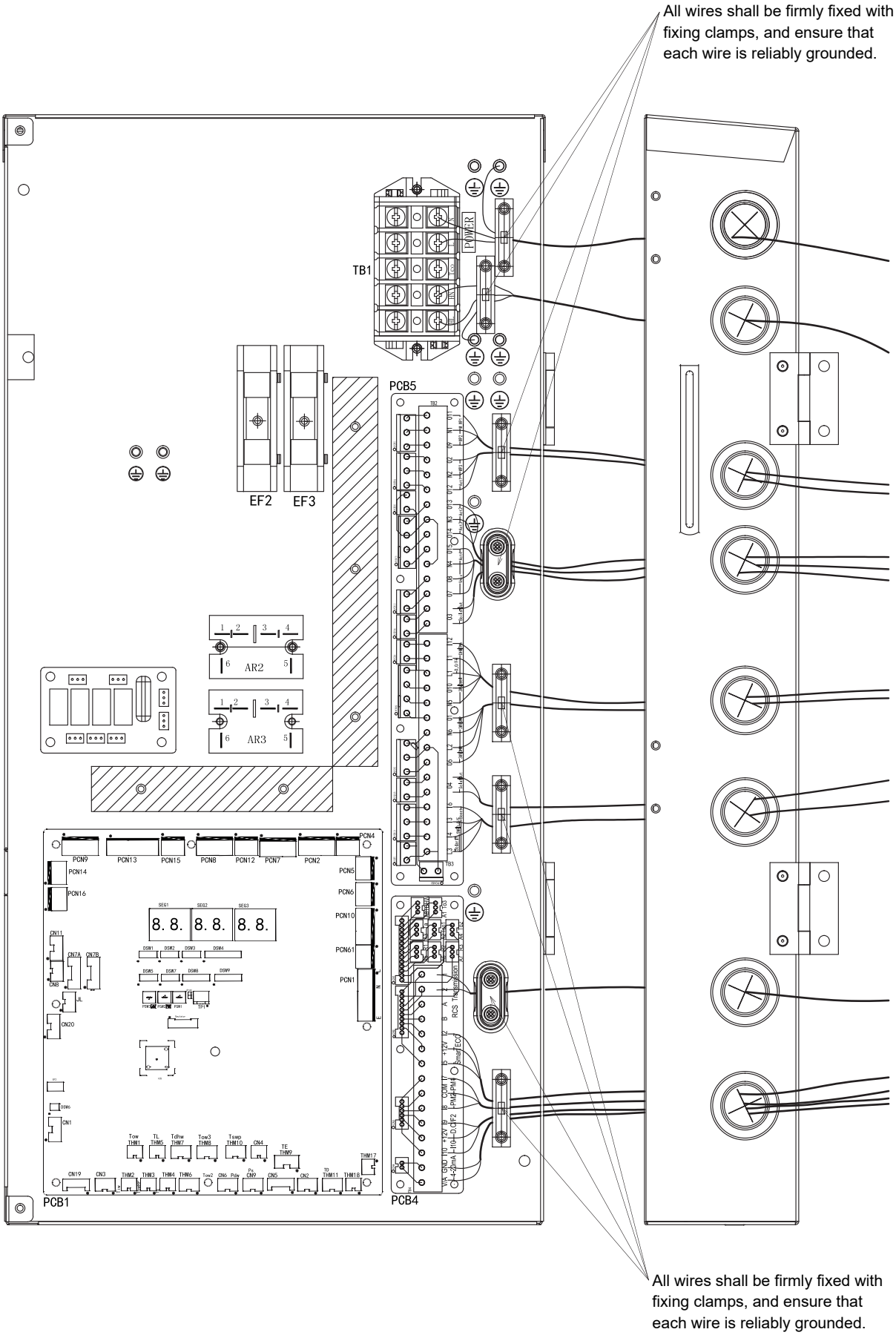

2. The wiring route outside electrical box, as below.

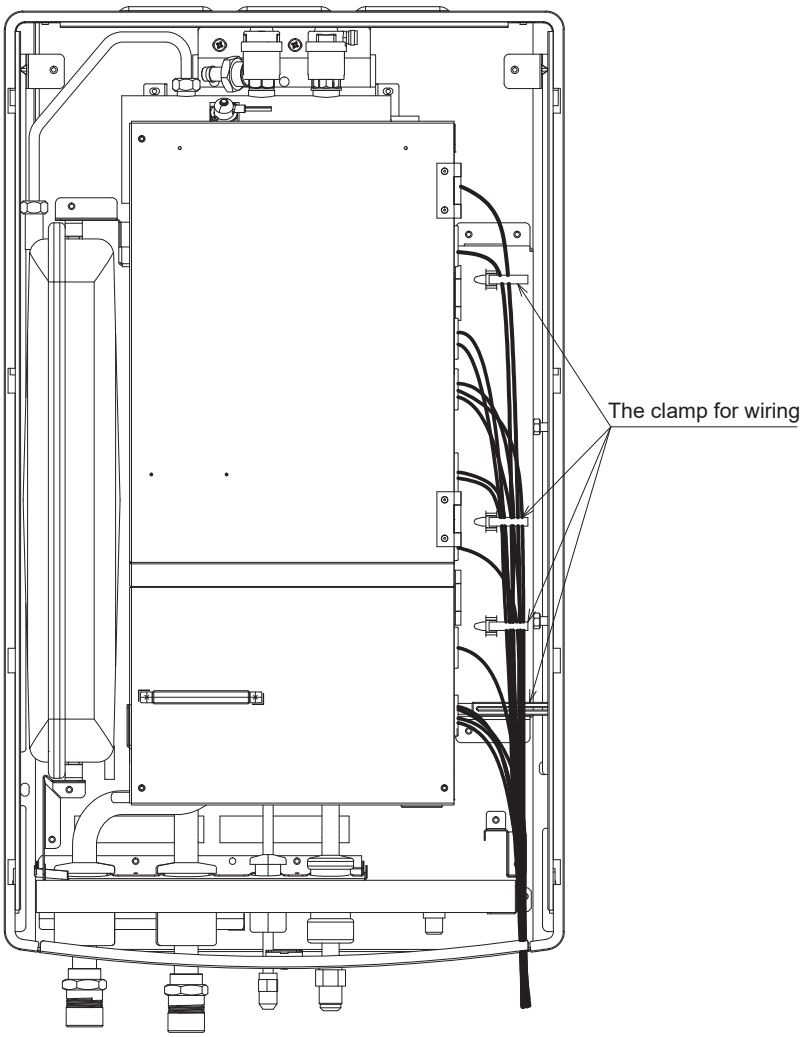

3. All wires enter the unit.

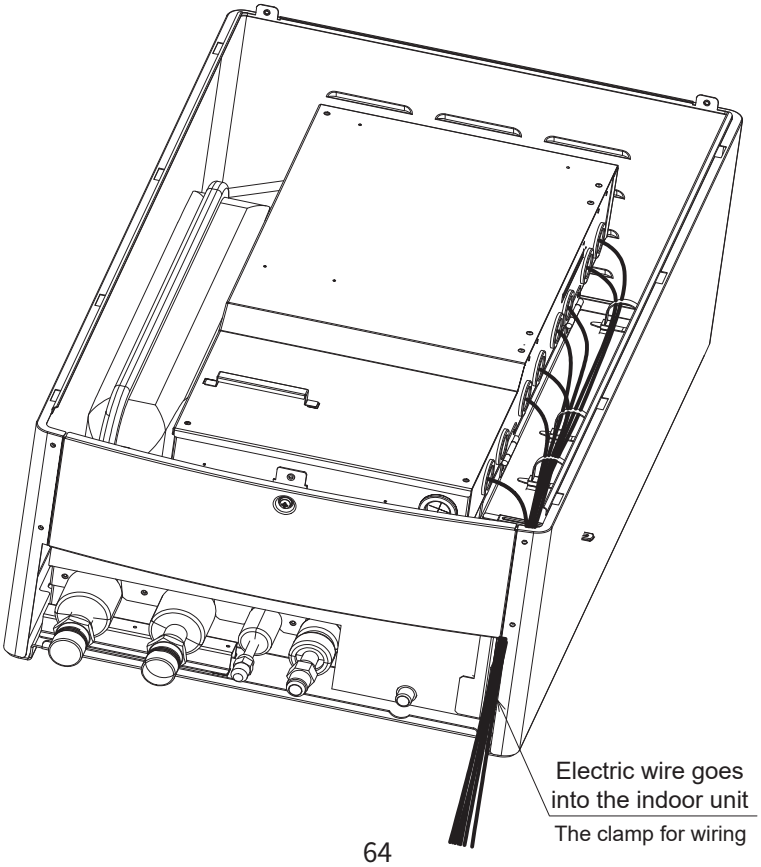

8.1.9.3 TERMINAL BOARD CONNECTIONS

8.1.9.3.1 Indoor / outdoor transmission wiring

- The transmission is wired to terminals 1-2.
- The shielding layer shall be grounded.

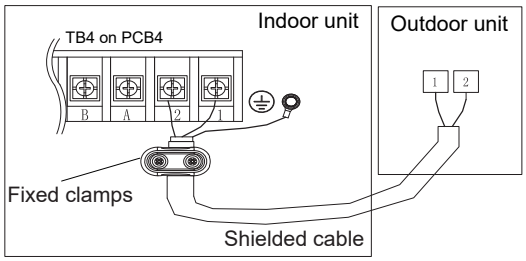

- Use twist pair wires (0.75 mm²) for transmission wiring between outdoor unit and indoor unit. The wiring must consist of 2-core wires (Do not use wire with more than 3 cores).
- Use shielded wires for transmission wiring to protect the units from noise interference, with a length of less than 300 m and a size in compliance with local codes.
- In the event that a conduit tube for field-wiring is not used, fix rubber bushes to the panel with adhesive.

⚠ CAUTION

Ensure that the transmission wiring is not wrongly connected to any live part that could damage the PCB.

8.1.9.3.2 Table board 1 (Main power supply)

The main power supply connection is wired to the Terminal board (TB1) as follows:

TB: Terminal board — : Power supply cables
CB: Air circuit breaker — : Transmission cables
ELB: Earth leakage breaker — ☆ : Field supplied, not cantained in the indoor unit

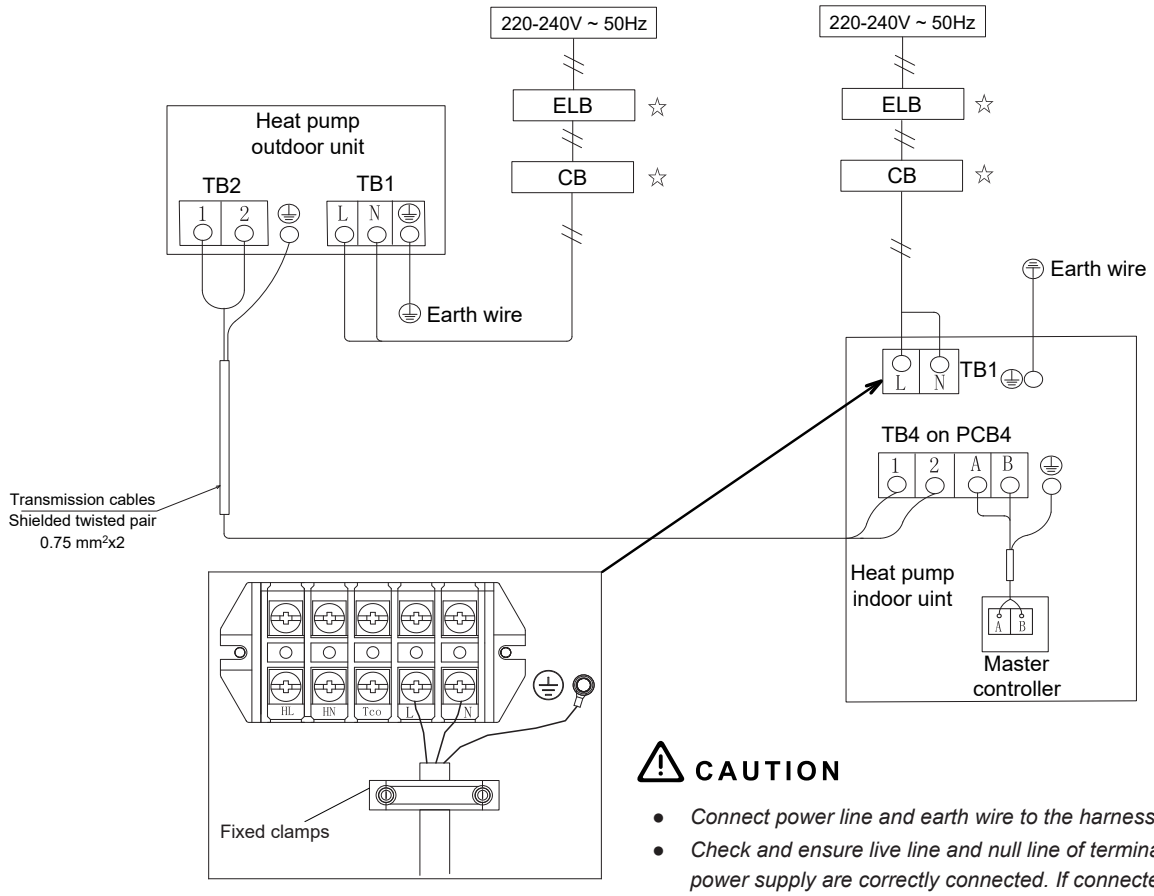

⚠ CAUTION

- *Connect power line and earth wire to the harness.*
- *Check and ensure live line and null line of terminal boards in power supply are correctly connected. If connected incorrectly, some parts may be damaged.*

8.1.9.3.3 **Wiring of DHW**

⚠ CAUTION

The electric heater of the DHW tank needs to meet the relevant requirements of local laws and regulations. It is necessary to protect it through a temperature fuse and a temperature protection switch.

1 Electric heater power ≤ 3 kW.

Power line connection should give concern to live line and null line, and be grounded strictly.

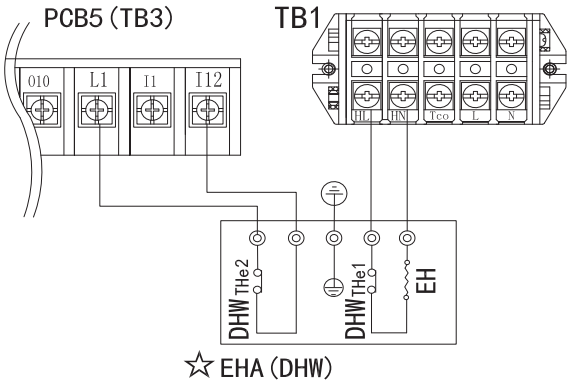

2 Electric heater power > 3 kW.

When the capacity of the electric heater is greater than 3 kW, the terminal HL/HN only provides control signals to control the ON/OFF of the AC contactor.

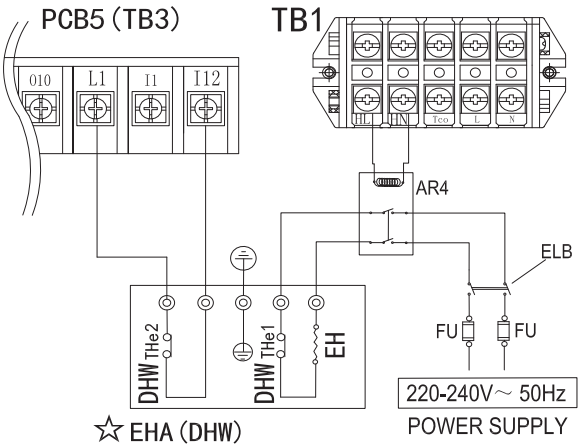

Codes	Indications	Recommended parameters
EHA (DHW)	DHW electric heater assembly	
EH (DHW)	DHW electric heater	
THe1	Temperature protection switch / Temperature fuse *Connected in the DHW electric heater power supply circuit, directly cut off the power supply of DHW electric heater when DHW temperature exceeds the protection value.*	Protection value 90 °C
THe2	Temperature protection switch (Auto restore) *When DHW temperature exceeds the protection value, the temperature protection switch open, and auto restore when DHW temperature reduce below the protection value. The unit can detect this temperature protection switch is open and cuts off the power supply DHW electric heater.*	Protection value 80 °C
AR4	AC contactor (repeater)	Selection according to EH (DHW) specifications
FU	Fuse	

⚠ CAUTION

Electrical wiring must be performed by professional technician according to national regulations.

- *Correctly mount cable water proof head and electrical box cover, preventing short circuit caused by water intruding into electrical box.*
- *To install the DHW electric heater which power is ≤ 3kW, power line requirements are shown below:*

	Power Source	Rated Current	Power Source Cable Size EN60335-1*
DHW tank power supply	220V-240V ~ 50Hz	15A	3 × 2.5mm^2
DHW tank temperature switch	220V-240V ~ 50Hz	-	2 × 0.75~2.5mm^2

* Code designation 60245 IEC 57

a. *Installation of on-site wire must complies with applicable legislation.*

b. *When power line is connected in series, total current value selects power line specification.*

- *Thermistor of DHW tank is weak current signal, preventing mixed with strong current signal.*
- *The DHW tank must have temperature protection devices recommended in this section to ensure the power supply of DHW electric heater can be cut off in time when the DHW temperature is too high.*

8.1.9.4 **OPTIONAL INDOOR UNIT WIRING (ACCESSORIES)**

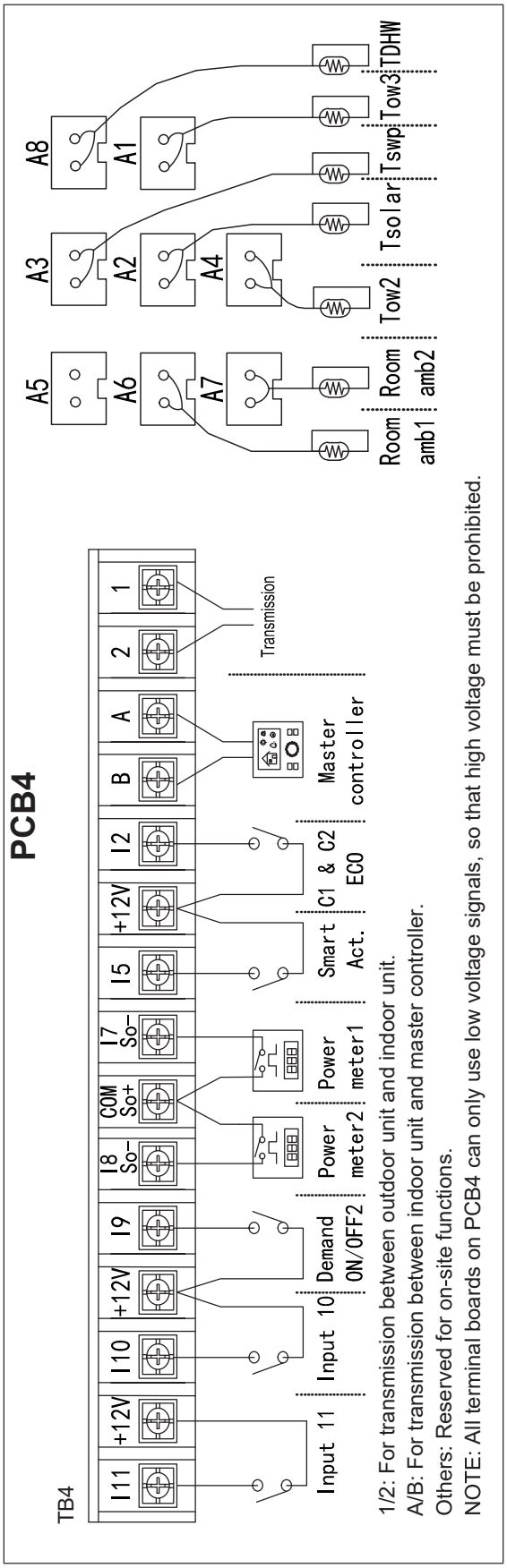

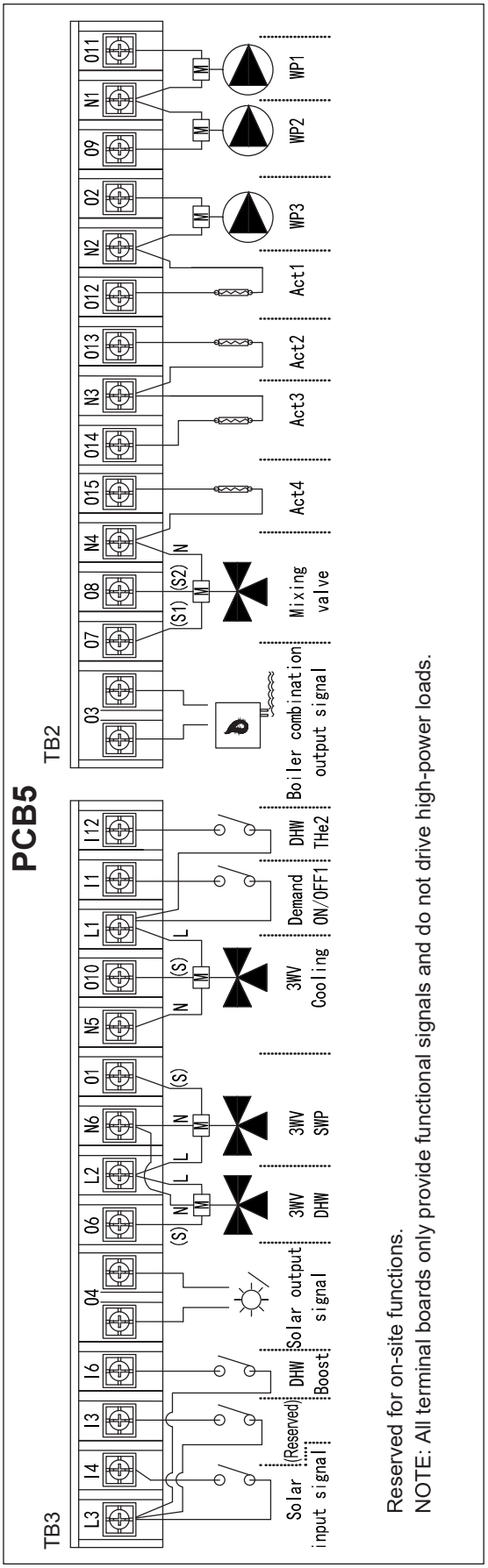

NOTE

Inputs and outputs printed on the board are the setting before shipment options. By means of the master controller, some other inputs and output functions can be configured and used.

Input - Setting before shipment

Mark	Description	Default settings	Available input codes	Terminals	Specification
I1	Input 1	i - 08 (Demand ON/OFF 1)	i - 00~17 (Except i - 07/12)	I1, L1 on TB3	Closed/Open 220-240V ~ 50/60Hz
I2	Input 2	i - 13 (Cycle 1 and 2 ECO mode)	i - 00~17 (Except i - 07/12)	I2, +12V on TB4	Closed/Open 12V DC
I3	Input 3	i - 00 (No function)	i - 00~17 (Except i - 07/12)	I3, L3 on TB3	Closed/Open 220-240V ~ 50/60Hz
I4	Input 4	i - 04 (Solar in)	i - 00~17 (Except i - 07/12)	I4, L3 on TB3	Closed/Open 220-240V ~ 50/60Hz
I5	Input 5	i - 02 (Smart Act.)	i - 00~17 (Except i - 07/12)	I5, +12V on TB4	Closed/Open 12V DC
I6	Input 6	i - 06 (DHW Boost)	i - 00~17 (Except i - 07/12)	I6, L3 on TB3	Closed/Open 220-240V ~ 50/60Hz
I7	Input 7	i - 07 (Power meter 1)	i - 00~17	I7, COM on TB4	Closed/Open 12V DC
I8	Input 8	i - 12 (Power meter 2)	i - 00~17	I8, COM on TB4	Closed/Open 12V DC
I9	Input 9	i - 09 (Demand ON/OFF 2)	i - 00~17 (Except i - 07/12)	I9, +12V on TB4	Closed/Open 12V DC
I10	Input 10	i - 00 (No function)	i - 00~17 (Except i - 07/12)	I10, +12V on TB4	Closed/Open 12V DC
I11	Input 11	i - 00 (No function)	i - 00~17 (Except i - 07/12)	I11, +12V on TB4	Closed/Open 12V DC

⚠ CAUTION

Functions i - 05(Forced Heating/Cooling) /Functions i - 10(Forced heating)/Functions i - 11(Forced cooling) cannot be used at the same time.

Input - All input codes descriptions:

Input codes	Mark	Description
i - 00	No Function	-
i - 02	Smart Act./ SG Ready Input 1	This function must be used to stop or limit the heat pump and Auxiliary electric heater when restricted by Electric company. It allows an external Smart switch device to switch off or reduce consumption of the heat pump and Auxiliary electric heater during time of peak electricity demand. In case of using Smart Grid application, this input is used as a digital input 1 and allows four different operating modes.
i - 03	Swimming pool Demand ON/OFF	Optional input signal can be configured as function of “Swimming pool Demand ON/OFF” to operate SWP. Switch ON/OFF of SWP can also be controlled by master controller. Closed: Start SWP operation (Switch ON and Demand ON) Open: Stop SWP operation (Switch OFF and Demand OFF)
i - 04	Solar in	In case of combining Unit with solar panels, this input is used as a feedback for solar station ready operation. Closed: Solar in ON to trigger solar pump operation ON Open: Solar in OFF to trigger solar pump operation OFF
i - 05	Forced Heating/Cooling	Heating/cooling can be changed by an input of an external contact signal. Heating/cooling can also be changed over by master controller. Closed: Heating mode Open: Cooling mode
i - 06	DHW Boost	With this function enabled, it is possible to request a heating up of the DHW when user requires an instantaneous delivery of DHW. Triggering input signal can also Switch ON DHW.
i - 07	Power meter 1	Input used as kW/h pulse count for Energy data recording, used to count energy data or the total energy data.
i - 08	Demand ON/OFF 1	Optional input signal can be configured as function of “Demand ON/OFF 1” or “Demand ON/OFF 2” and selected as room thermostat. Closed: Corresponding room thermostat Switch ON and Thermo ON. Open: Corresponding room thermostat Switch OFF and Thermo OFF. Corresponding room thermostat can also be Switch ON/OFF by Rooms function on Master controller.
i - 09	Demand ON/OFF 2	
i - 10	Forced heating	Forced Heating mode by input of contact signal, Heating can also be changed over by master controller. Closed: Forced Heating mode Open: No action
i - 11	Forced cooling	Forced Cooling mode by input of contact signal, Cooling can also be changed over by master controller. Closed: Forced Cooling mode Open : No action
i - 12	Power meter 2	Input used as kW/h pulse count for Energy data recording, used to count energy data or the total energy data.
i - 13	Cycle 1 and 2 ECO mode	Cycle 1 and Cycle 2 Water ECO offset. Current water temperature setting is reduced or increased by the indicated parameter in space heating mode or space cooling mode. Closed: Cycle 1 and Cycle 2 Water ECO offset enabled Open: Cycle 1 and Cycle 2 Water ECO offset disabled
i - 14	Cycle 1 ECO mode	Cycle 1 Water ECO offset. Current water temperature setting is reduced or increased by the indicated parameter in space heating mode or space cooling mode. Closed: Cycle 1 Water ECO offset enabled Open: Cycle 1 Water ECO offset disabled
i - 15	Cycle 2 ECO mode	Cycle 2 Water ECO offset. Current water temperature setting is reduced or increased by the indicated parameter in space heating mode or space cooling mode. Closed: Cycle 2 Water ECO offset enabled Open: Cycle 2 Water ECO offset disabled
i - 16	Force OFF	Force OFF the unit include Water Cycle 1, Water Cycle 2, DHW and SWP. Switch ON/OFF of different function can also be controlled by master controller. Closed: Forced OFF the unit include Water Cycle 1, Water Cycle 2, DHW and SWP. Open: No action”
i - 17	SG Ready Input 2	In case of using Smart Grid application, this input is used as a digital input 2 and allows four different operating modes.

Output - Setting before shipment

Mark	Description	Default settings	Available output codes	Terminals		Specification
O1	Output 1	o - 01 (3WV SWP)	o - 00 ~ 29 (Except o - 02/08/17/21)	Power supply	L2, N6 on TB3	ON/OFF 220-240V ~ 50/60Hz Max. 1A
				Signal line	O1 on TB3	
O2	Output 2	o - 02 (WP3)	o - 00 ~ 29 (Except o - 17)	O2, N2 on TB2		ON/OFF 220-240V ~ 50/60Hz Max. 1A
O3	Output 3	o - 03 (Boiler combination)	o - 00 ~ 29 (Except o - 02/08/17/21)	O3 on TB2		Free voltage
O4	Output 4	o - 04 (Solar out)	o - 00 ~ 29 (Except o - 02/08/17/21)	O4 on TB3		Free voltage
O5	Output 5	o - 17 (DHW Electric Heater)	o - 00 ~ 29	WL, WN on TB1		ON/OFF 220-240V ~ 50/60Hz Max. 15A
O6	Output 6	o - 18 (3WV DHW)	o - 00 ~ 29 (Except o - 02/08/17/21)	Power supply	L2, N6 on TB3	ON/OFF 220-240V ~ 50/60Hz Max. 1A
				Signal line	O6 on TB3	
O7	Output 7	o - 19 (Mixing valve Close)	o - 00 ~ 29 (Except o - 02/08/17/21)	O7, N4 on TB2		ON/OFF 220-240V ~ 50/60Hz Max. 1A
O8	Output 8	o - 20 (Mixing valve Open)	o - 00 ~ 29 (Except o - 02/08/17/21)	O8, N4 on TB2		ON/OFF 220-240V ~ 50/60Hz Max. 1A
O9	Output 9	o - 21 (WP2)	o - 00 ~ 29 (Except o - 17)	O9, N1 on TB2		ON/OFF 220-240V ~ 50/60Hz Max. 1A
O10	Output 10	o - 22 (3WV Cooling)	o - 00 ~ 29 (Except o - 02/08/17/21)	Power supply	L1, N5 on TB3	ON/OFF 220-240V ~ 50/60Hz Max. 1A
				Signal line	O10 on TB3	
O11	Output 11	o - 08 (WP1)	o - 00 ~ 29 (Except o - 17)	O11, N1 on TB2		ON/OFF 220-240V ~ 50/60Hz Max. 1A
O12	Output 12	o - 23 (Act1)	o - 00 ~ 29 (Except o - 02/08/17/21)	O12, N2 on TB2		ON/OFF 220-240V ~ 50/60Hz Max. 1A
O13	Output 13	o - 24 (Act2)	o - 00 ~ 29 (Except o - 02/08/17/21)	O13, N3 on TB2		ON/OFF 220-240V ~ 50/60Hz Max. 1A
O14	Output 14	o - 25 (Act3)	o - 00 ~ 29 (Except o - 02/08/17/21)	O14, N3 on TB2		ON/OFF 220-240V ~ 50/60Hz Max. 1A
O15	Output 15	o - 26 (Act4)	o - 00 ~ 29 (Except o - 02/08/17/21)	O15, N4 on TB2		ON/OFF 220-240V ~ 50/60Hz Max. 1A

Output - All output codes descriptions:

Output codes	Mark	Description
o - 00	No Function	-
o - 01	3WV SWP	In case of combining Unit with swimming pool, this output is used to drive 3-way valve diverting to the swimming pool heat exchanger. Output ON signal when swimming pool function is operating.
o - 02	WP3	In case of combining Unit with hydraulic separator, this output is used to drive relay of water pump 3.
o - 03	Boiler combination	In case of combining Unit with boiler, this output is used to Start/Stop it.
o - 04	Solar out	In case of combining Unit with solar panel, this output is used to drive relay of solar pump.
o - 05	Alarm signal	Output ON signal when an Alarm Code is existence.
o - 06	SWP signal	Output ON signal in case that Swimming pool function is demand ON.
o - 07	Cooling signal	Output ON signal in case that Space Cooling is Thermo-ON.
o - 08	WP1	In case of the pipeline connected to the unit is long leading to low water flow rate, this output is used to drive relay of a extra WP1 that can be cascaded with inside EC WP1 to offer additional hydraulic head. The extra WP1 works equally with inside EC WP1.
o - 09	Heating signal	Output ON signal in case that Space Heating is Thermo-ON.
o - 10	DHW signal	Output ON signal in case that DHW is demand ON or DHW Electric Heater is ON.
o - 11	Solar overheat	Output ON signal in case that solar panels overheat protection is activated.
o - 12	Defrost	Output ON signal in case that the outdoor unit is defrosting.
o - 13	DHW re-circulation pump	Output ON signal to drive relay of a re-circulation pump in case of re-circulation pump is available for DHW tank.
o - 14	Heater relay 1	Copy ON/OFF signal of Auxiliary electric heater output terminal 1.
o - 15	Heater relay 2	Copy ON/OFF signal of Auxiliary electric heater output terminal 2.
o - 16	c1 water ON/OFF	Output ON signal in case that Water Cycle1 switch ON.
o - 17	DHW Electric Heater	Output ON signal in case the DHW Electric Heater is Enabled and meet the ON conditions.
o - 18	3WV DHW	In case of combining Unit with DHW, this output is used to drive 3-way valve diverting to the sanitary tank inner coil. Output ON signal when DHW function is operating.
o - 19	Mixing valve Close	Mixing valve has two operation terminals of closing valve and opening valve. Optional output signal need be configured as function of "Mixing valve Close" and "Mixing valve Open" to drive mixing valve.
o - 20	Mixing valve Open	
o - 21	WP2	When Water Cycle 2 is available Optional Output signal need be configured to drive relay of water pump 2.
o - 22	3WV Cooling	In case of combining Unit with cooling fan coil, this output is used to drive 3-way valve diverting to cooling fan coil. Output ON signal when space cooling is operating.
o - 23	Act1	Room actuators, output ON signal in case the corresponding Room Thermostat is Thermo ON (heating and cooling). And also meet follow condition Room actuators also Output ON: ① Air purge ② Anti-freezing ③ Screed Drying ④ Retry operation due to anti freezing (alarm-76 , d1-31, d1-03) ⑤ Outdoor Unit defrost without Room Thermostat Thermo ON ⑥ Overrun after requiring OFF
o - 24	Act2	
o - 25	Act3	
o - 26	Act4	
o - 27	Act5	
o - 28	Act6	
o - 29	Act7	

Auxiliary sensor - Setting before shipment

Mark	Description	Default settings	Available auxiliary sensor codes
A1	Auxsensor 1	a - 01 (Tow3)	a - 00 ~ 13
A2	Auxsensor 2	a - 03 (Tsolar)	a - 00 ~ 13
A3	Auxsensor 3	a - 02 (Tswp)	a - 00 ~ 13
A4	Auxsensor 4	a - 05 (Tow2)	a - 00 ~ 13
A5	Auxsensor 5	a - 00 (No Function)	a - 00 ~ 13
A6	Auxsensor 6	a - 07 (Room_amb1)	a - 00 ~ 13
A7	Auxsensor 7	a - 08 (Room_amb2)	a - 00 ~ 13

Auxiliary sensor codes - All Auxiliary sensor codes descriptions:

Auxiliary sensor codes	Mark	Description
a - 00	No Function	-
a - 01	Tow3	This sensor is used in case to combine Unit with hydraulic separator to detect Hot water temperature detection of hydraulic separator .
a - 02	Tswp	In case of combining Unit with swimming pool, this sensor is used to detect swimming pool water temperature.
a - 03	Tsolar	In case of combining Unit with solar panels, this sensor is used to Detect Hot water temperature of solar panels .
a - 04	Ta_ao	Optional Second Outdoor Ambient Temperature sensor accessory can be connected to the Auxiliary sensor in case that the heat pump is located in a non-suitable position for this measurement.
a - 05	Tow2	When Water Cycle 2 is available, auxiliary sensor need be configured as function of “Tow2” to detect outlet water temperature of Water Cycle 2.
a - 06	duty	Used to detect duty signal when duty signal control is Enabled, the duty signal type can be 0-10V, 0-5V or 10-20mA.
a - 07	Room_amb1	Rooms function on master controller is selected as room thermostat, and in this scenario, auxiliary sensor can be configured as function of “Room_amb1-7”, and can be selected as room temperature detection of specific room.
a - 08	Room_amb2	
a - 09	Room_amb3	
a - 10	Room_amb4	
a - 11	Room_amb5	
a - 12	Room_amb6	
a - 13	Room_amb7	

⚠ DANGER

- ***Do not connect or adjust any wiring or connections unless the main power switch is OFF.***
- ***When using more than one power source, check and ensure that all of them are turned OFF before operating the indoor unit.***
- ***Avoid wiring installation in contact with the refrigerant pipes, water pipes, edges of plates and electrical components inside the unit to prevent damage, which may cause electric shock or short circuit.***

⚠ CAUTION

- *After changing the input settings, output settings and auxiliary sensor settings on the master controller, it needs to be powered off and on again to take effect.*
- *Use a dedicated power circuit for the indoor unit. Do not use a power circuit shared with the outdoor unit or any other appliance.*
- *Make sure that all wiring and protection devices are properly selected, connected, identified and fixed to the corresponding terminals of the unit, specially the protection (earth) and power wiring, taking into account the applicable national and local regulations. Establish proper earthing. Incomplete earthing may cause electric shock.*
- *Protect the indoor unit against the entry of small animals (like rodents) which could damage the drain pipe and any internal wire or any other electrical part, leading to electric shock or short-circuit.*
- *Keep a distance between each wiring terminal and attach insulation tape or sleeve as shown in the figure.*

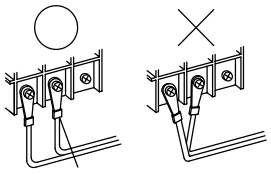

Tape or sleeve

8.1.9.5 SETTING OF DIP SWITCHES ON PCB1

NOTE

- *The mark "■" indicates the dip switches positions.*
- *No mark "■" indicates pin position is not affected.*
- *The figures show the settings before shipment or after selection.*
- *"Not used" means that the pin must not be changed. A malfunction might occur if changed.*

CAUTION

Before setting dip switches, first turn the power supply OFF and then set the position of dip switches. If the switches are set without turning the power supply OFF, the contents of the setting are invalid.

(1) DSW1: Unit model setting

No setting is required.

Split
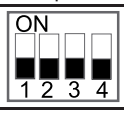

(2) DSW2: Unit capacity setting

No setting is required.

044(2.0 HP)	060(2.5 HP)	080(3.0 HP)

(3) DSW3: Additional setting

Setting before shipment	
ON: Cancel 70 alarm (Water pressure abnormality)	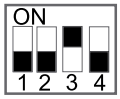
Anti-freezing settings ON: Whole water cycle does anti-freezing. OFF: Only primary cycle does anti-freezing.	

(4) DSW4: Additional setting

Setting before shipment	
Water pump forced ON	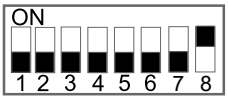
Auxiliary electric heater forced OFF	
ON: Anti-freezing enabled OFF: Anti-freezing disabled	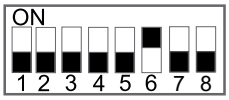
Water pump mode when Thermo OFF ON: Operate constantly OFF: Operate periodically	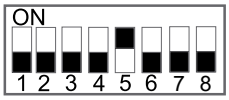
Manual emergency setting ON: Manual emergency enabled OFF: Manual emergency disabled	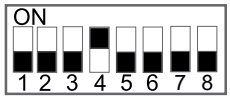
DHW electric heater allowance setting ON: DHW electric heater cancel forced OFF OFF: DHW electric heater forced OFF	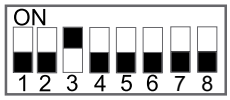
DHW 3-way valve forced ON	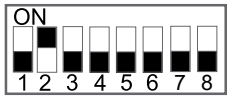
Start air purge	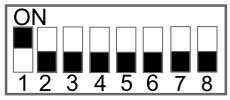

(5) DSW5: Additional setting

Setting before shipment	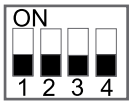
ON: Cancel 75/78 alarm (Water pump abnormalities)	
ON: WP3 operates in space cooling mode.	

(6) DSW6: Fuse reset

Setting before shipment	

(7) DSW7: Not used

Setting before shipment	

(9) DSW8: Refrigeration system No. setting

Setting is required.

Use binary encoding method. Before shipment are all OFF.

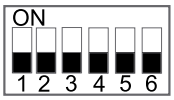

Max No.63 are available to set when all the equipment are connected to corresponding Central Control System.

Ex: Set refrigeration system No. as 8.

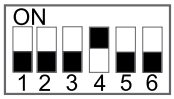

(8) DSW9: Indoor unit No. setting

No setting is required.

Setting before shipment	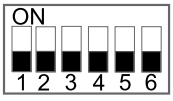

8.1.10 TEST RUN

NOTE

NEVER operate the unit without careful inspection.

8.1.10.1 CHECKLIST BEFORE TEST RUN

Do NOT operate the system before the following checks are OK:

You have read the complete installation instructions of outdoor unit, indoor unit and master controller carefully.	☐
The indoor unit is properly mounted.	☐
The outdoor unit is properly mounted.	☐
The following field wiring has been carried out according to this document and the applicable legislation: ▪ Between the local power supply and the outdoor unit ▪ Between indoor unit and outdoor unit ▪ Between the local power supply and the indoor unit ▪ Between the indoor unit and the valves (if applicable) ▪ Between the indoor unit and the room thermostat (if applicable) ▪ Between the indoor unit and the DHW tank (if applicable)	☐ ☐ ☐ ☐ ☐ ☐ ☐
The system is properly earthed and the earth terminals are tightened.	☐
The fuses or locally installed protection devices are installed according to this document, and have NOT been bypassed.	☐
The power supply voltage matches the voltage on the Nameplate of the unit.	☐
There are NO loose connections or damaged electrical components in the electrical box.	☐
There are NO damaged components or squeezed pipes on the inside of the indoor and outdoor units.	☐
Only for DHW tank with electric heater: Temperature protection switch (Auto restore) has been already wired. Temperature protection switch / Temperature fuse has been already wired.	☐
There are NO refrigerant leaks.	☐
The water pipes are thermally insulated.	☐
The correct pipe size of refrigerant pipes (gas and liquid) are installed and the pipes are properly insulated.	☐
There is NO water leakage inside the indoor unit.	☐
The shut-off valves are properly installed and fully open.	☐
The stop valves (gas and liquid) on the outdoor unit are fully open.	☐
The air purge valve is open (at least 2 turns).	☐
The safety valve purges water when open.	☐
The minimum water volume is guaranteed in all conditions. See section 8.1.8.3 “Check water volume”.	☐
The DHW tank is filled completely.	☐

CAUTION

- *The unit starts only when all check points are cleared up.*
- *Pay attention when system is running:*
  - *(A) Do not touch any parts of discharge pipelines, because the discharge temperature of compressor can be more than 90°C.*
  - *(B) Do not press AC contactor button, otherwise serious accident may be caused.*
- *Do not touch any electrical components in 10 minutes after main power supply is cut off.*

8.1.10.2 CHECKLIST DURING TEST RUN

The minimum flow rate during electric heater/defrost operation is guaranteed in all conditions. See section “8.2 Requirements and recommendations for hydraulic circuit” and “8.3 Water filling”.	☐
To perform an air purge.	☐
To perform a test run.	☐
To perform an actuator test run.	☐
Underfloor screed drying function The underfloor screed drying function is started (if necessary).	☐

CAUTION

- When performing test run of floor heating, higher temperature in indoor unit (up to 55 °C) will damage floors due to expansion and contraction. Recommend it is within 30 minutes.
- Use the controller to start test run (refer to the manual of master controller).
- It is normal that after indoor unit is energized, it may directly enter anti-freezing running mode, and water pump automatically runs if outdoor temperature is very low.

8.2 Installation of Hi-Therma Split Outdoor Unit

8.2.1 GENERAL INFORMATION

8.2.1.1 GENERAL NOTES

- This manual gives a common description and information for this heat pump air conditioner which you operate as well for other models.
- This manual should be considered as a permanent part of the heat pump air conditioning equipment and should remain with the air conditioning equipment.
- No part of this publication may be reproduced, copied, filed or transmitted in any shape or form without the permission of Hisense.
- Within the policy of continuous improvement of its products, Hisense reserves the right to make changes at any time without prior notification and without being compelled to introducing them into products previously sold. This document may therefore have been subject to amendments during the life of the product.
- As a result, some of the images or data used to illustrate this document may not refer to specific models. No claims will be accepted based on the data, illustrations and descriptions included in this manual.
- This heat pump air conditioner has been designed for the following ambient temperatures. Please operate the air conditioner within the ranges.

		Min.	Max.
Outdoor unit	Space heating	-25°C DB	35°C DB
	Domestic hot water (DHW)	-25°C DB	40°C DB
	Space cooling	5°C DB	46°C DB

DB: Dry Bulb

- Upon receiving this product, inspect it for any shipping damage. Claims for damage, either apparent or concealed, in a written form, should be filed immediately with the shipping company.
- Check the model number, electrical characteristics (power supply, voltage and frequency) and accessories to determine if they are correct.
- The standard utilization of the unit shall be explained in these instructions. Therefore, the utilization of the unit other than those indicated in these instructions is not recommended. Please contact your local agent, as the occasion arises.
- If you have any questions, please contact your dealer or designated service center of Hisense.

8.2.1.2 GENERAL SAFETY

- **Notice: Servicing shall be performed only as recommended by the manufacturer.**
- **Qualification of workers**
  Warning: Every working procedure that affects safety means shall only be carried out by competent persons.
  Examples for such working procedures are:
  - breaking into the refrigerating circuit.
  - opening of sealed components.
  - opening of ventilated enclosures.
- **Information on servicing**
  - Prior to beginning work on systems, safety checks are necessary to ensure that the risk of ignition is minimized.
  - Work shall be undertaken under a controlled procedure so as to minimized the risk of flammable gas or vapor being present while the work is being performed.
  - Work in confined spaces shall be avoided. The area around the workspace shall be sectioned off. Ensure that the conditions within the area have been made safe by control of flammable material.
- **Checking for presence of refrigerant**
  - The area shall be checked with an appropriate refrigerant detector prior to and during work. The leak detection equipment should be suitable for use with all applicable refrigerants, i.e. non-sparking, adequately sealed or intrinsically safe.
- **Presence of fire extinguisher**
  - If any hot work is to be conducted, appropriate fire extinguishing equipment shall be available to hand. Have a dry powder or CO2 fire extinguisher adjacent to the charging area.
- **No ignition sources**
  - All possible ignition sources, including cigarette smoking, should be kept sufficiently far away from the site of installation, repairing, removing and disposal. Prior to work taking place, the area around the equipment is to be surveyed to make sure that there are no flammable hazards or ignition risks. “No Smoking” signs shall be displayed.
- **Ventilated area**
  - Ensure that the area is in the open or that it is adequately ventilated before breaking into the system or conducting any hot work. A degree of ventilation shall continue during the period that the work is carried out. The ventilation should safely disperse any released refrigerant and preferably expel it externally into the atmosphere.
- **Checks to the refrigeration equipment**
  - where electrical components are being changed, they shall be fit for the purpose and to the correct specification.
  At all times the manufacturer’s maintenance and service guidelines shall be followed. If in doubt, consult the manufacturer’s technical department for assistance.
  The following checks shall be applied to installations.
  - The charge size is in accordance with the room size within which the refrigerant containing parts are installed.

- The ventilation machinery and outlets are operating adequately and are not obstructed.
- If an indirect refrigerating circuit is being used, the secondary circuit shall be checked for the presence of refrigerant.
- Marking to the equipment continues to be visible and legible. Markings and signs that are illegible shall be corrected.
- Refrigeration pipe or components are installed in a position where they are unlikely to be exposed to any substance which may corrode refrigerant containing components, unless the components are constructed of materials which are inherently resistant to being corroded or are suitably protected against being so corroded.

- **Checks to electrical devices**
  - Repair and maintenance to electrical components shall include initial safety checks and component inspection procedures. If a fault exists that could compromise safety, then no electrical supply shall be connected to the circuit until it is satisfactorily dealt with. If the fault cannot be corrected immediately but it is necessary to continue operation, an adequate temporary solution shall be used. This shall be reported to the owner of the equipment, so that all parties are advised.
  - Initial safety checks shall include:
  (1) that capacitors are discharged: this shall be done in a safe manner to avoid possibility of sparking;
  (2) that no live electrical components and wiring are exposed while charging, recovering or purging the system;
  (3) that there is continuity of earth bonding.
- **Repairs to sealed components**
  - During repairs to sealed components, all electrical supplies shall be disconnected prior to any removal of sealed covers, etc. If it is absolutely necessary to have an electrical supply to equipment during servicing, then a permanently operating form of leak detection shall be located at the most critical point to warn of a potentially hazardous situation.
  - Ensure that by working on electrical components, the casing is not altered in such a way that the level of protection is affected, including damage to cables, excessive number of connections, terminals not made to original specification, damage to seals, incorrect fitting of glands, etc.
  - Ensure that the apparatus is mounted securely.
  - Ensure that seals or sealing materials have not degraded to the point that they no longer serve the purpose of preventing the ingress of flammable atmospheres. Replacement parts shall be in accordance with the manufacturer's specifications.
- **Repair to intrinsically safe components**
  - Do not apply any permanent inductive or capacitance loads to the circuit without ensuring that this will not exceed the permissible voltage and current permitted for the equipment in use.
  - Intrinsically safe components are the only types that can be worked on while live in the presence of a flammable atmosphere.
  - Replace components only with parts specified by the manufacturer. Other parts may result in the ignition of refrigerant in the atmosphere from a leak.
- **Cabling**
  - Check that cabling will not be subject to wear, corrosion, excessive pressure, vibration, sharp edges or any other adverse environmental effects. The check shall also take into account the effects of aging or continual vibration from sources such as compressors or fans.
- **Detection of flammable refrigerants**
  - Under no circumstances shall potential sources of ignition be used in the searching for or detection of refrigerant leaks. A halide torch (or any other detector using a naked flame) shall not be used.
- **Leak detection methods**
  - Electronic leak detectors may be used to detect refrigerant leaks but the sensitivity may not be adequate, or may need re-calibration for the flammable refrigerants.
  - Ensure that the detector is not a potential source of ignition and is suitable for the refrigerant used. Leak detection equipment shall be set at a percentage of the LFL of the refrigerant and shall be calibrated to the refrigerant employed, and the appropriate percentage of gas (25 % maximum) is confirmed.
  - The use of detergents containing chlorine shall be avoided.
  - If a leak is suspected, all naked flames shall be removed/extinguished.
  - If a leakage of refrigerant is found which requires brazing, all of the refrigerant shall be recovered from the system, or isolated (by means of shut off valves) in a part of the system remote from the leak. Oxygen free nitrogen (OFN) shall then be purged through the system both before and during the brazing process.
- **Removal and evacuation**
  - The refrigerant charge shall be recovered into the correct recovery cylinders and the system shall be "flushed" with OFN to render the unit safe. This process may need to be repeated several times.
  - Compressed air or oxygen shall not be used for purging refrigerant systems.
  - Flushing shall be achieved by breaking the vacuum in the system with OFN and continuing to fill until the working pressure is achieved, then venting to atmosphere, and finally pulling down to a vacuum. This process shall be repeated until no refrigerant is within the system. When the final OFN charge is used, the system shall be vented down to atmospheric pressure to enable work to take place. This operation is absolutely vital if brazing operations on the pipe-work are to take place.
  - The outlet for the vacuum pump is not close to any ignition sources and that ventilation is available.

- **Charging procedures**
  - Ensure that contamination of different refrigerants does not occur when using charging equipment. Hoses or lines shall be as short as possible to minimise the amount of refrigerant contained in them.
  - Cylinders shall be kept upright.
  - Ensure that the refrigeration system is earthed prior to charging the system with refrigerant.
  - Label the system when charging is complete (if not already).
  - Extreme care shall be taken not to overfill the refrigeration system.
  - Prior to recharging the system, it shall be pressure-tested with the appropriate purging gas. The system shall be leak-tested on completion of charging but prior to commissioning. A follow up leak test shall be carried out prior to leaving the site.
- **Decommissioning**
  - Before carrying out this procedure, it is essential that the technician is completely familiar with the equipment and all its detail.
  - Prior to the task being carried out, an oil and refrigerant sample shall be taken in case analysis is required prior to re-use of reclaimed refrigerant.
  - Electrical power must be available before the task is commenced.
  - Become familiar with the equipment and its operation.
  - Isolate system electrically.
  - Before attempting the procedure, ensure that:
  (1) mechanical handling equipment is available, if required, for handling refrigerant cylinders;
  (2) all personal protective equipment is available and being used correctly;
  (3) the recovery process is supervised at all times by a competent person;
  (4) recovery equipment and cylinders conform to the appropriate standards.
  - Pump down refrigerant system, if possible.
  - If a vacuum is not possible, make a manifold so that refrigerant can be removed from various parts of the system.
  - Make sure that cylinder is situated on the scales before recovery takes place.
  - Start the recovery machine and operate in accordance with manufacturer's instructions.
  - Do not overfill cylinders. (No more than 80 % volume liquid charge).
  - Do not exceed the maximum working pressure of the cylinder, even temporarily.
  - When the cylinders have been filled correctly and the process completed, make sure that the cylinders and the equipment are removed from site promptly and all isolation valves on the equipment are closed off.
  - Recovered refrigerant shall not be charged into another refrigeration system unless it has been cleaned and checked.
- **Labelling**
  - Equipment shall be labelled stating that it has been decommissioned and emptied of refrigerant. The label shall be dated and signed.
  - Ensure that there are labels on the equipment stating the equipment contains flammable refrigerant.
- **Recovery**
  - When transferring refrigerant into cylinders, ensure that only appropriate refrigerant recovery cylinders are employed.
  - Ensure that the correct number of cylinders for holding the total system charge are available. All cylinders to be used are designated for the recovered refrigerant and labelled for that refrigerant (i.e. special cylinders for the recovery of refrigerant).
  - Cylinders shall be complete with pressure-relief valve and associated shut-off valves in good working order. Empty recovery cylinders are evacuated and, if possible, cooled before recovery occurs.
  - The recovery equipment shall be in good working order with a set of instructions concerning the equipment that is at hand and shall be suitable for the recovery of all appropriate refrigerants.
  - A set of calibrated weighing scales shall be available and in good working order. Hoses shall be complete with leak-free disconnect couplings and in good condition. Before using the recovery machine, check that it is in satisfactory working order, has been properly maintained and that any associated electrical components are sealed to prevent ignition in the event of a refrigerant release.
  - The recovered refrigerant shall be returned to the refrigerant supplier in the correct recovery cylinder, and the relevant waste transfer note arranged.
  - Do not mix refrigerants in recovery units and especially not in cylinders.
  - If compressors or compressor oils are to be removed, ensure that they have been evacuated to an acceptable level to make certain that flammable refrigerant does not remain within the lubricant.
  - The evacuation process shall be carried out prior to returning the compressor to the suppliers.
  - Only electric heating to the compressor body shall be employed to accelerate this process.
  - When oil is drained from a system, it shall be carried out safely.

8.2.2 SAFETY

8.2.2.1 APPLIED SYMBOLS

- During normal heat pump system design work or unit installation, greater attention must be paid in certain situations requiring particular care in order to avoid damage to the unit, the installation or the building or property.
- Situations that pose a risk to the safety of those in the surrounding area or to the unit itself are clearly indicated in this manual.
- A series of special symbols are used to clearly identify these situations.
- Pay close attention to these symbols and to the messages following them, as your safety and that of others depends on it.

DANGER

- ***The text following this symbol contains information and instructions relating directly to your safety.***
- ***Not taking these instructions into account could lead to serious, very serious or even fatal injuries to you and others.***

CAUTION

- *The text following this symbol contains information and instructions relating directly to your safety.*
- *Not taking these instructions into account could lead to minor injuries to you and others.*
- *Not taking these instructions into account could lead to unit damage.*

NOTE

- *The text following this symbol contains information and instructions that may be use or that require a more thorough explanation.*
- *Instructions regarding inspections to be made on unit parts or systems may also be included.*

Caution, risk of fire!

This appliance is filled with R32, an odourless low burning velocity refrigerant. If the refrigerant is leaked, there is a possibility of ignition if it enters in contact with an external ignitions source.

DANGER

This symbol shows that this equipment uses a low burning velocity refrigerant. If the refrigerant is leaked, there is a possibility of ignition if it enters in contact with an external ignition source.

RISK OF EXPLOSION

The compressor must be stopped before removing the refrigerant pipes. All service valves must be fully closed after pumping down operation.

Symbol	Explanation
	Before installation, read the installation and operation manual, and the wiring instruction sheet.
	Before performing maintenance and service tasks, read the service manual.
	For more information, see the Technical, Installation and Service Handbook.

8.2.2.2 ADDITIONAL INFORMATION

DANGER

- ***Do not pour water into the unit. These products are equipped with electrical parts. If the electrical components are in contact with water, a serious electrical shock will take place.***
- ***Do not touch or adjust safety devices inside the unit. If these devices are touched or adjusted, a serious accident can take place.***
- ***Do not open the service cover or access inside the unit with-out disconnecting the main power supply.***
- ***In case of fire Turn OFF the main switch, put out the fire at once and contact your service contractor.***
- ***Disconnect the appliance from its power source during service and when replacing parts.***
- ***It must be ensured that the heat pump cannot operate accidentally without water neither with air inside hydraulic system.***
- ***Check that the earth wire is securely connected. If the unit is not properly earthed, it may lead to electric shock. Do not connect the earth wire to gas piping, water piping, lighting conductor or earth wire of a telephone.***
- ***Fix the cables securely. External forces on the terminals could lead to a fire.***
- ***Use an ELB (earth leakage breaker, with an actuation time of 0.1s or less). In the event of a fault, there is danger of an electric shock or a fire if it is not used.***
- ***Do not charge oxygen, acetylene or other flammable and poisonous gases into the refrigerant cycle when performing a leakage test or an air-tightness test. These types of gases are extremely dangerous and can cause an explosion.***
- ***Do not install the unit in the following places, otherwise, it may lead to a fire, deformation, corrosion or failure.***
  - Places where oil (including machinery oil) splashes.
  - Places where flammable gas may generate or flow.
  - Places where there is splashing water.
  - Places where sulfide gas drifts such as in hot spring.
  - Places where strong wind with high salinity blows such as coast regions, or places with an atmosphere of acidity or alkalinity.
- ***Do not install the unit in the place where silicon gas drifts. If the silicon gas attaches to the surface of heat exchanger, the fin surface repels water. As a result, drain water splashes outside of the drain pan and splashed water runs inside of electrical box. In the end, water leakage or electrical devices failure may occur.***

- ***Means for disconnection from the supply mains, which have a contact separation in all poles that provide full disconnection under overvoltage category III conditions, must be incorporated in the fixed wiring in accordance with the wiring rules.***
- ***The appliance shall be installed in accordance with national wiring regulations.***
- ***The installation and service of this product shall be carried out by professional personnel, who have been trained and certified by national training organizations that are accredited to teach the relevant national competency standards that may be set in legislation.***
- ***Mechanical connectors used indoors shall comply with ISO 14903. When mechanical connectors are reused indoors, sealing parts shall be renewed. When flared joints are reused indoors, the flare part shall be re-fabricated.***
- ***Reusable mechanical connectors and flared joints are not allowed indoors.***
- ***Disconnect the appliance from its power source during service and when replacing parts.***

⚠ CAUTION

- *Do not use any sprays such as insecticide, lacquer, hair spray or other flammable gases within approximately 1 meter from the system.*
- *If circuit breaker or fuse is often activated, stop the system and contact your service contractor.*
- *Do not make service or inspections tasks by yourself. This work must be performed by qualified service person.*
- *Do not put any foreign material (sticks, etc...) inside the units. These units have high speed rotating fans and it is dangerous when any object touches them.*
- *Refrigerant leakage can cause difficulty with breathing due to insufficient air.*
- *Installation and service engineering must comply with local standards, laws and regulations. The standards (British Standard, BS4434) may be applicable if local regulations are not available.*
- *This air to water heat pump has been designed for standard water heating for human beings only. Do not use this for other functions that are not included in the wired controller.*
- *Do not install the unit in the place where the breeze directly catches the animals and plants. It could adversely affect the animals and plants.*
- *Pay attention to the following points when the unit is installed in hospital or other facilities where there are strong electromagnetic waves from medical equipment.*
  - *Do not install the unit where the electromagnetic wave is directly radiated to the electrical box, wiring, wired controller and adapter.*
  - *At least 3 meters from strong electromagnetic wave radiators, such as radio equipment.*
- *If the supply cord is damaged, it must be replaced by the manufacturer, its service agent or similarly qualified persons in order to avoid a hazard.*
- *This appliance can be used by children aged from 8 years and above and persons with reduced physical, sensory or mental capabilities or lack of experience and knowledge if they have been given supervision or instruction concerning use of the appliance in a safe way and understand the hazards involved. Children shall not play with the appliance. Cleaning and user maintenance shall not be made by children without supervision.*

NOTE

- *It is recommended to ventilate the room every 3 or 4 hours.*
- *The air conditioner may not work properly in the following cases.*
  - *The power supplied by the power transformer is less than or equal to the electric power of the air conditioner.*
  - *The large power-consuming equipment is too close to the power supply wiring of the air conditioner,large surge voltage may be inducted in the power supply wiring of the air conditioner.*

8.2.3 IMPORTANT NOTICE

- **PLEASE READ THE MANUAL CAREFULLY BEFORE STARTING WORK ON THE INSTALLATION OF THE SYSTEM.** Failure to observe the instructions for installation, use and operation described in this documentation may result in operating failure including potentially serious faults, or even the destruction of the system.
- Verify, in accordance with the manuals which appear in the outdoor and indoor unit, that all the information required for the correct installation of the system is included. If this is not the case, contact your distributor.
- Hisense pursues a policy of continuing improvement in design and performance of products. The right is therefore reserved to vary specifications without notice.
- Hisense cannot anticipate every possible circumstance that might involve a potential hazard.
- Check and make sure that the explanations of each part of this manual correspond to your air to water heat pump model.
- Refer to the models codification to confirm the main characteristics of your system.
- Signal words (DANGER, CAUTION and NOTE) are used to identify levels of hazard seriousness. Definitions for identifying hazard levels are provided in initial pages of this document.
- This unit is exclusively for air to water systems. It can not be used with indoor units in air to air systems.

DANGER

Do not use means to accelerate the defrosting process or to clean, other than those recommended by the manufacturer.

- ***The appliance shall be stored in a room without continuously operating ignition sources (for example: open flames, an operating gas appliance or an operating electric heater.***
- ***Do not pierce or burn.***
- ***Be aware that the R32 refrigerants does not contain an odour.***

DANGER

Pressure Vessel and Safety Device: This heat pump is equipped with a high pressure vessel under PED (Pressure Equipment Directive). The pressure vessel has been designed and tested before shipment according to PED.
Also, in order to prevent the system from an abnormal pressure, a high pressure switch, which needs no field adjustment, is utilized in the refrigeration system.
Therefore, this heat pump is protected from abnormal pressures. However, if abnormally high pressure is applied to the refrigeration cycle including the high pressure vessel(s), it will result in serious injury or death due to explosion of the pressure vessel.
Do not apply a pressure higher than the maximum allowable pressure(refer to nameplate) to the system, by modifying or changing the high pressure switch.

- **Start-up and Operation:** Check to ensure that all the stop valves are fully opened and no obstacle exists at the inlet/outlet sides before start-up and during the operation.
- **Maintenance:** Periodically check the high pressure side pressure. If the pressure is higher than the maximum allowable pressure, stop the system and clean the heat exchanger or remove the cause.

8.2.4 TRANSPORTATION AND HANDLING

Transport the product as close to the installation location as possible before unpacking.

CAUTION

- *Do not step on or put any materials on the product.*
- *Do not put any foreign material into the outdoor unit and check to ensure that none exists in the outdoor unit before the installation and test run. Otherwise, a fire or failure, etc. may occur.*

When manually lifting the unit using the handles, pay attention to the following points.

- *To prevent the unit from overturning, pay attention to the center of gravity as shown in the below figure.*
- *Two or more personnel should be used to move the unit.*

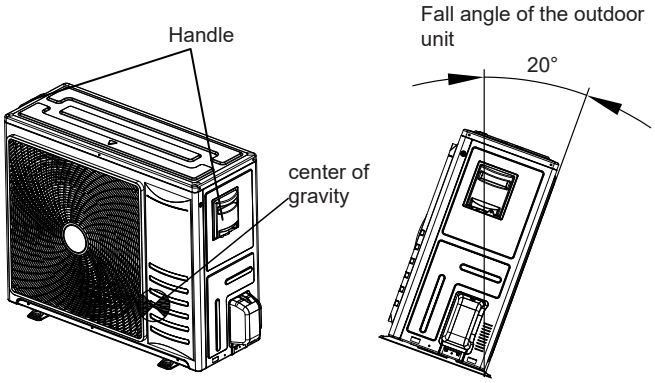

8.2.5 BEFORE OPERATION

CAUTION

- *When the system is started after a shut-off longer that approximately 3 months, it is recommended to check the system by your service contractor.*
- *Make sure that the outdoor unit is not covered with snow or ice. If covered, remove it by using hot water (approximately 50°C). If the water temperature is higher than 50°C, it will cause damage to plastic parts.*

8.2.5.1 LINE-UP OF OUTDOOR UNITS

Capacity	44(2.0HP)	60(2.5HP)	80(3.0HP)
Model	AHW-044HCDS1	AHW-060HCDS1	AHW-080HCDS1

8.2.5.2 FACTORY-SUPPLIED UNIT COMPONENTS

Check to ensure that the following accessories are packed with the outdoor unit.

Accessory	Image	Qty.	Purpose
Instruction manual		1	Basic instructions for the installation of the device
Drain nozzle		1	For water discharge when necessary
Pipe adapter	Φ6.35→Φ9.53	1	Piping connection for: AHW-044HCDS1, AHW-060HCDS1
	Φ6.35→Φ9.53	1	Piping connection for: AHW-080HCDS1
	Φ12.7→Φ15.88	1	
Flare Nut	Φ6.35	1	Piping connection for liquid stop valve
	Φ12.7	1	Piping connection for gas stop valve

NOTE

- *The previous accessories are supplied inside the unit.*
- *If any of these accessories are not packed with the unit or any damage to the unit is detected, please contact your dealer.*

8.2.6 GENERAL DIMENSIONS

Unit: mm

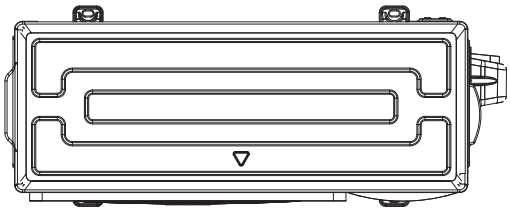

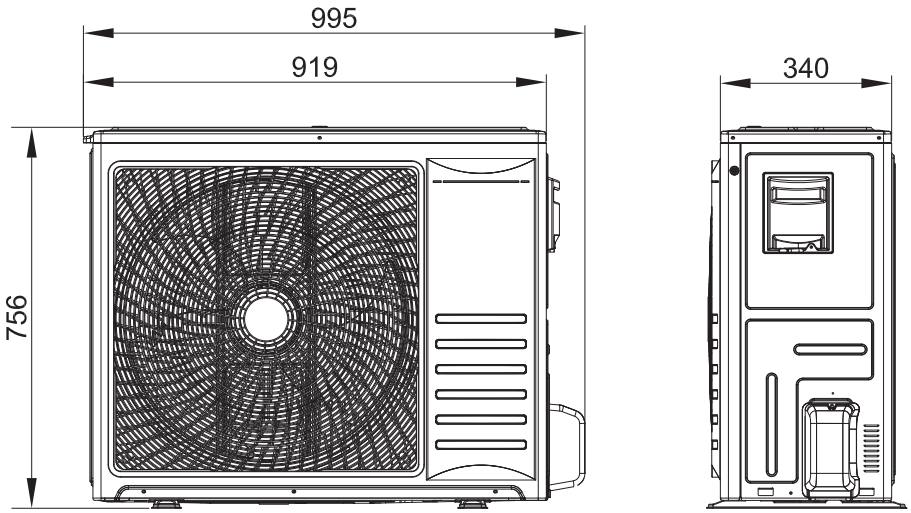

8.2.7 UNIT INSTALLATION

⚠ CAUTION

- *Install the unit in the shade or not exposed to direct sunshine or direct radiation from high temperature heat source.*
- *Make sure that the foundation is flat and sufficiently strong.*
- *This unit has aluminum fin with sharp edges. Pay attention to the fin to avoid injury. Install the unit in a restricted area not accessible by the general public.*
- *When installing the outdoor unit in snow-covered areas, mount the field-supplied hoods at the discharge side of the outdoor unit and the inlet side of the heat exchanger.*
- *Do not install the unit in a space where a seasonal wind directly blows to the outdoor heat exchanger or a wind from a building space directly blows to the outdoor fan.*

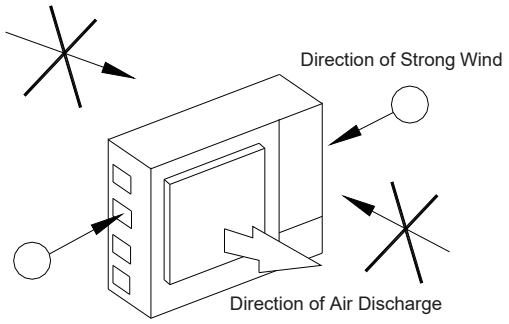

- In case of installation in the open spaces unavoidably where there is no buildings or surrounding structures, install near the wall to avoid facing the wind directly.
  Ensure that the service space should be secured.

⚠ DANGER

- ***Install the unit with sufficient clearance around it for operation and maintenance. Install the unit where good ventilation is available.***
- ***For cleaning, use noninflammable and nontoxic cleaning liquid. Use of inflammable agent should cause explosion or fire.***
- ***Work with sufficient ventilation, for working in an enclosed space should cause oxygen deficiency. Toxic gas should be produced when cleaning agent is heated to high temperature by e.g., being exposed to fire.***
- ***Install the unit in a location where noise emitted by the unit does not disturb neighbours.***
- ***Cleaning liquid shall be collected after cleaning.***
- ***Pay attention not to clamp cables when attaching the service cover to avoid electric shock or fire.***

A Wall to Guard Against Wind

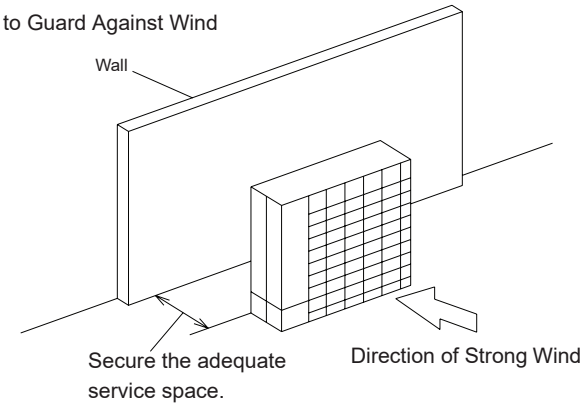

NOTE:
If the extreme strong wind blows directly against the air discharge portion, the fan may rotate reversely and be damaged.

8.2.7.1 INSTALLATION SPACE

(Unit: mm)

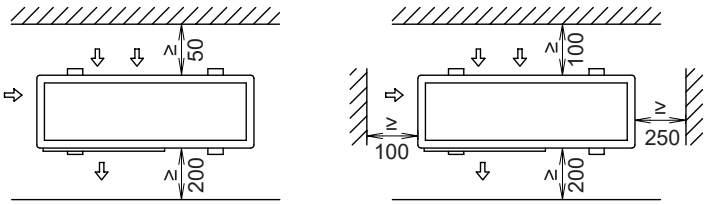

a) In case of front side and either of the sides are open (single unit)

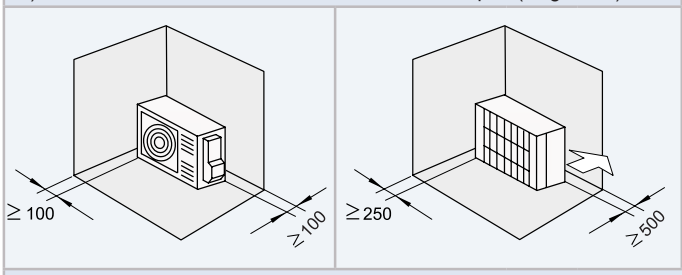

b) **In case that surrounding wall exist (single unit)**

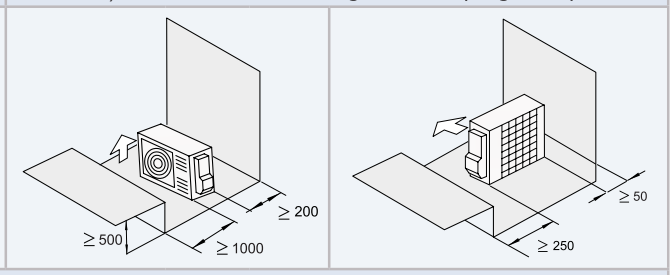

c) **In case that upper side obstacles exist (single unit)**

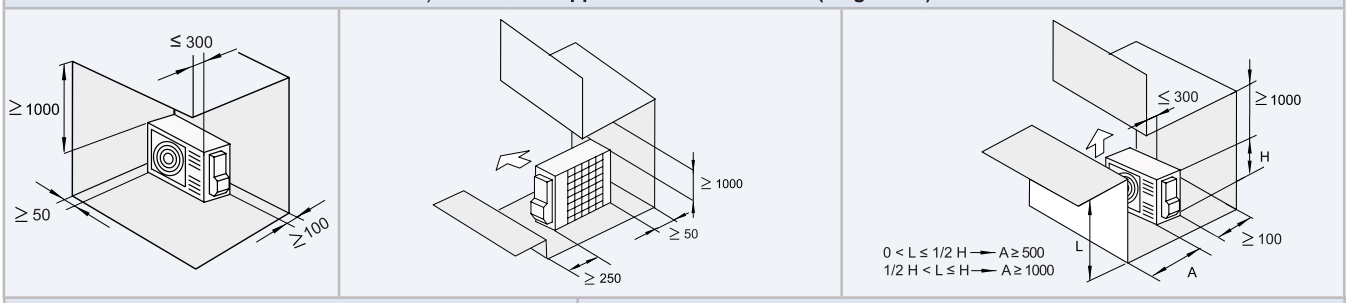

d) **In case that upper side obstacles exist (serial units)**

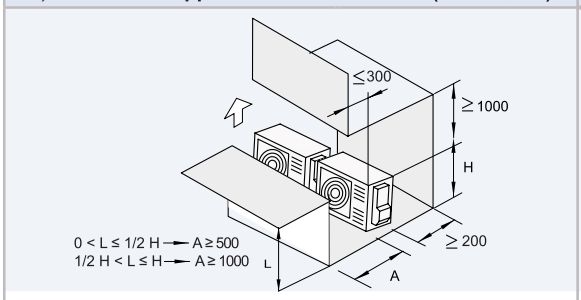

e) In case that front side and either of the sides are open (serial units)

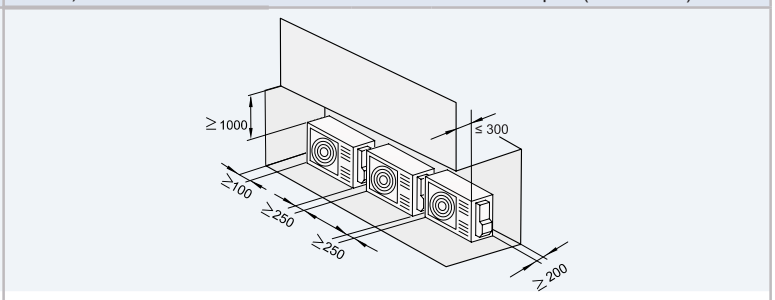

f) **In case that surrounding wall exist (serial units)**

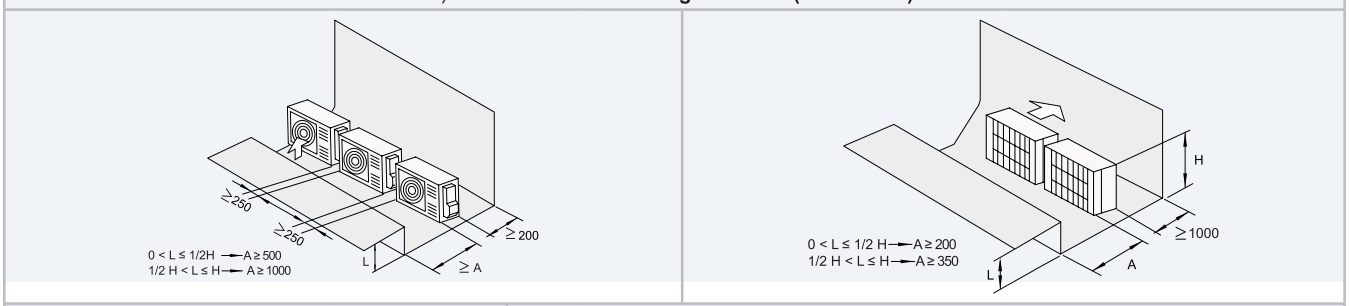

g) Horizontal (multiple units)

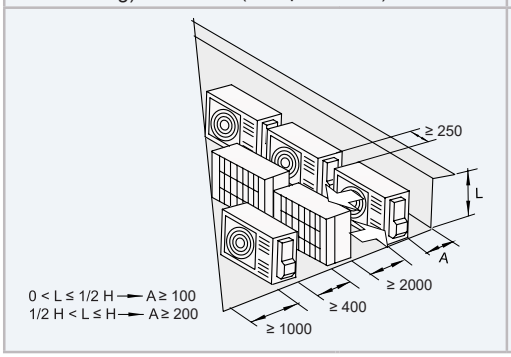

h) Vertical (multiple units)

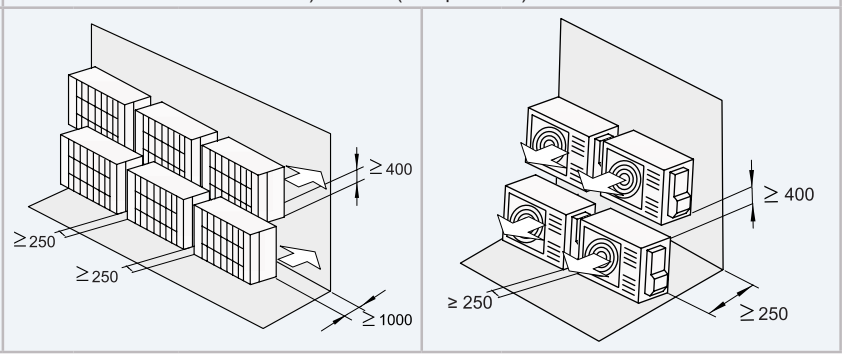

NOTE

- *If L is greater than H, install the outdoor unit on the foundation, so that H is greater than or equal to L. H: Outdoor unit height + foundation height.*
- *Do not stack more than two units in height.*
- *In all cases, short circuit of air flow is not allowed.*

8.2.7.2 **INSTALLATION PLACE PROVISION**

- Secure the outdoor unit with the anchor bolts.

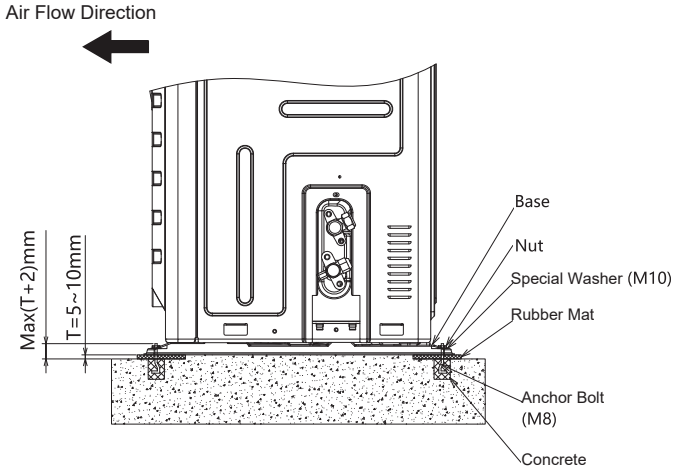

- Fix the outdoor unit to the anchor bolts by field-supplied special washer.
- When installing the outdoor unit, fix the unit by anchor bolts. Regarding the location of fixing holes

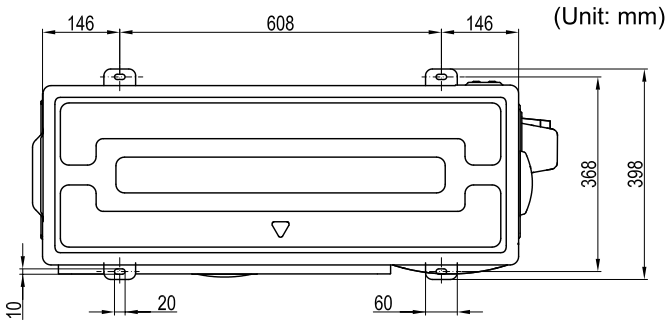

- Example of fixing outdoor unit by anchor bolts.

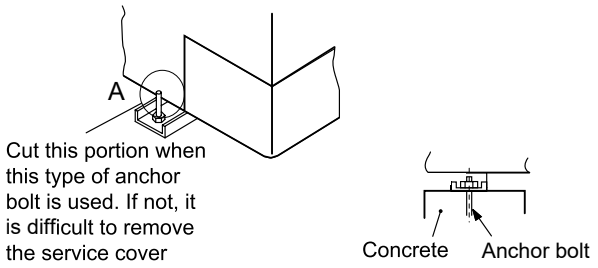

- When installing the unit on a roof or a veranda, drain water may turn to ice in a cold morning. Therefore, avoid draining in an area where people often use because it is slippery.
  In case of installing in such a place, provide the additional drainage around the foundation.

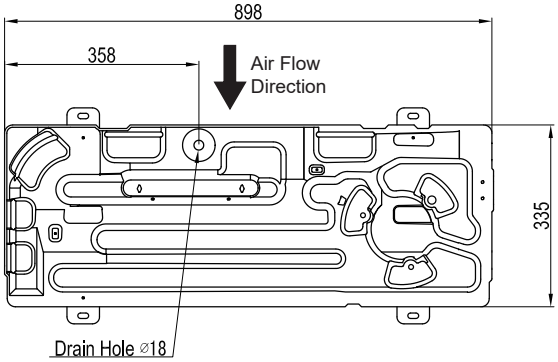

- The whole of the base of the outdoor unit should be installed on a foundation. When using vibration-proof mat, it should also be positioned in the same way. When installing the outdoor unit on a field-supplied frame, use metal plates to adjust the frame width for stable installation as shown in figure.

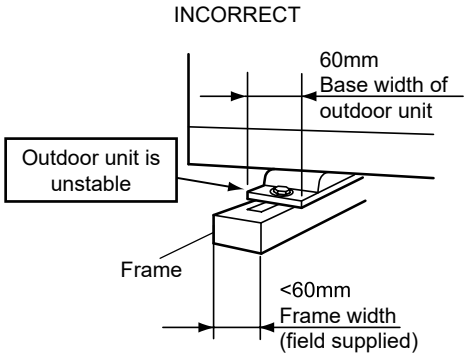

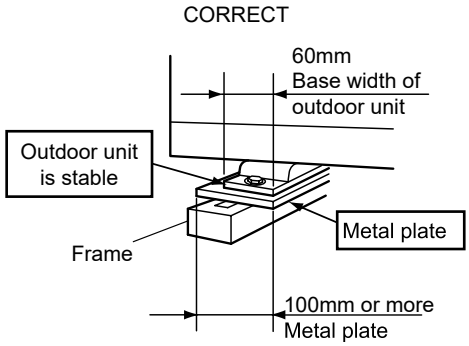

Recommended metal plate size (field-supplied

- Material: Hot-rolled mild steel plate (SPHC)
- Plate thickness: 4.5T

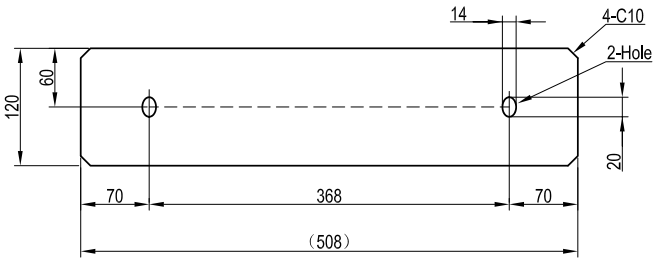

8.2.7.3 DRAIN PIPING

When the base of the outdoor unit is temporarily utilized as a drain receiver and the drain water in it is discharged, one drain nozzle is needed.
The drain nozzle should be inserted into the base of the outdoor unit up to the extruded portion.

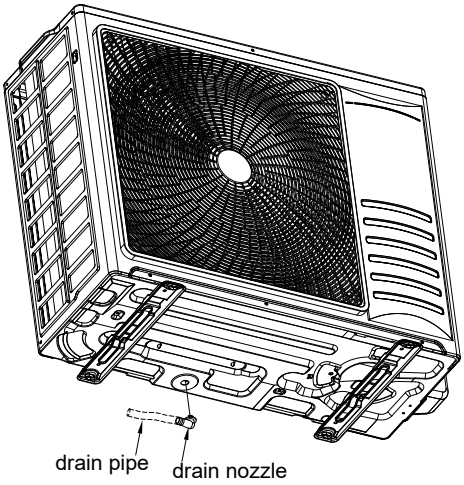

NOTE

- *The drain nozzle is factory-supplied with a rubber washer.*

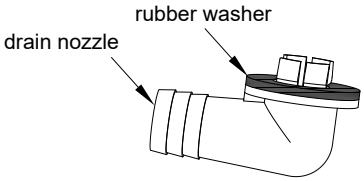

- *A drain pipe(inner diameter:15mm) should be field-supplied.*
- *Do not use this drain nozzle in a cold area, because the drain water may freeze.*
- *Please install the drain nozzle before the refrigerant piping work.*

8.2.8 REFRIGERANT PIPING WORK

CAUTION

Make sure that refrigerant piping installation complies with the legislation EN378 and local legislation.

8.2.8.1 PIPING MATERIALS

1. Prepare field-supplied copper pipes.
2. Select the piping size with the correct thickness and correct material which have sufficient pressure strength.
3. Select clean copper pipes. Make sure there is no dust and moisture inside. Blow the inside of the pipes with oxygen free nitrogen to remove any dust and foreign materials before connecting pipes.

NOTE

- *A system with no moisture or oil contamination will give maximum performance and lifecycle compared to that of a poorly prepared system. Take particular care to ensure all copper piping is clean and dry internally.*

CAUTION

- *All external piping shall be selected in size and dimension avoiding any mechanical strength due to contraction or expansion, vibration or refrigerant pulsation.*
- *All the piping shall be protected against any environmental effect like water freezing, corrosion, etc. When flexible pipe is used, precautions shall be taken against mechanical damages, excessive stresses by torsion or any other.*
- *Flare nut connections shall be accessible for maintenance purposes.*
- *Ensure that refrigerant piping is earthed prior to units interconnection and in case of additional refrigerant charging is required.*
- *Cap the end of the pipe when pipe is to be inserted through a hole.*
- *Do not put pipes on the ground directly without a cap or vinyl tape at the end of the pipe.*

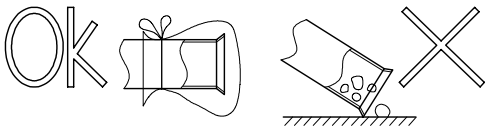

- *If piping installation is not completed until next day or over a longer period of time, braze off the ends of the piping and charge with oxygen free nitrogen through a Schrader valve type access fitting to prevent moisture and particle contamination.*

CAUTION

- *Do not use insulation material that contains NH3 because it can damage cooper pipe material and can be a source of future leakage.*
- *Completely insulate both refrigerant gas piping and liquid piping between the indoor unit and the outdoor unit. If not insulated, dew will occur on the piping surface.*

8.2.8.2 PIPING SIZE

- Outdoor unit

Stop valve(mm)	
Gas Pipe	Liquid Pipe
Φ12.7	Φ6.35

- Indoor unit

Gas Pipe(mm)	Liquid Pipe(mm)
Φ15.88	Φ9.53

- *The pipe between outdoor unit and indoor unit*

Capacity	Total Piping length L(m)	Gas pipe(mm)	Liquid pipe(mm)
44 (2.0HP)	5≤ L <10	Φ12.7	Φ9.53
	10≤ L ≤40		Φ6.35
60 (2.5HP)	5≤ L <10	Φ12.7	Φ9.53
	10≤ L ≤40		Φ6.35
80 (3.0HP)	5≤ L <10	Φ15.88	Φ9.53
	10≤ L ≤45		Φ6.35

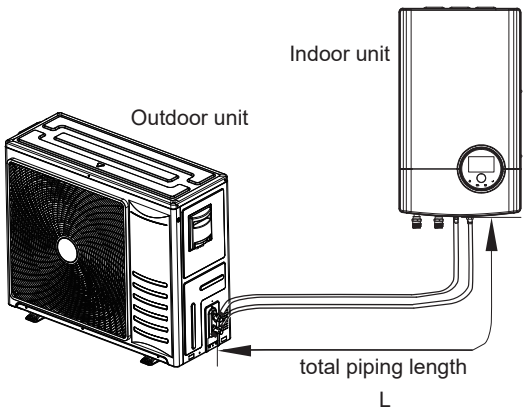

NOTE

- *The piping sizes between the outdoor unit and indoor unit vary according to different piping length. The pipe adapters(factory-supplied) are required.*

Capacity	Total Piping length L(m)	Outdoor unit	
		Gas pipe(mm)	Liquid pipe(mm)
44 (2.0HP)	5≤ L<10	-	Φ6.35→Φ9.53
	10≤ L ≤40		-
60 (2.5HP)	5≤ L <10	-	Φ6.35→Φ9.53
	10≤ L ≤40		-
80 (3.0HP)	5≤ L <10	Φ12.7→Φ15.88	Φ6.35→Φ9.53
	10≤ L ≤45		-

Capacity	Total Piping length L(m)	Indoor unit	
		Gas pipe(mm)	Liquid pipe(mm)
44 (2.0HP)	5≤ L <10	Φ15.88→Φ12.7	-
	10≤ L ≤40		Φ9.53→Φ6.35
60 (2.5HP)	5≤ L <10	Φ15.88→Φ12.7	-
	10≤ L ≤40		Φ9.53→Φ6.35
80 (3.0HP)	5≤ L <10	-	-
	10≤ L ≤45		Φ9.53→Φ6.35

8.2.8.3 PIPING CONNECTION

1. Take the piping cover away from the unit.

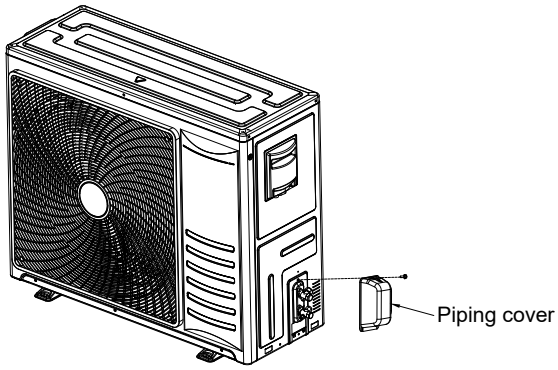

2. Connect the indoor unit and the outdoor unit with field-supplied refrigerant piping. Suspend the refrigerant piping at certain points and prevent the refrigerant piping from touching the weak part of the building such as wall, ceiling, etc.
   (If touched, abnormal sound may occur due to the vibration of the piping. Pay special attention in case of short piping length)

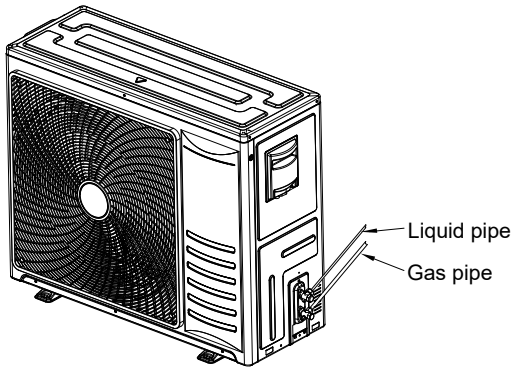

3. Apply the oil thinly at the seat surface of the flare nuts(*) and pipes before tightening. Refrigerant oil is field-supplied.
4. The stop valves should be performed according to the following section.
5. Use a pipe bender for pipe bending work when connecting pipes.
6. Install the piping cover back in order to prevent rainwater from entering the unit.

(*) The factory-supplied flare nuts are used to connect the gas and the liquid stop valves.

NOTE

- *If the flare nut is tightened too hard, the flare nut may crack after a long time and cause refrigerant leakage.*
- *Tightening Torque for flare nuts:*

Piping size (mm)	Tightening Torque (N.m)
Φ6.35	14~18
Φ9.53	34~42
Φ12.7	50~62
Φ15.88	63~77

CAUTION

- *Check to ensure that the stop valves are completely closed before connecting.*

8.2.8.3.1 OUTDOOR UNIT STOP VALVE

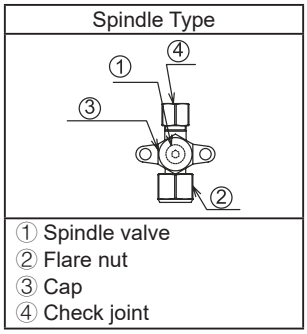

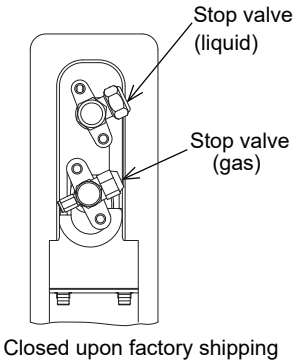

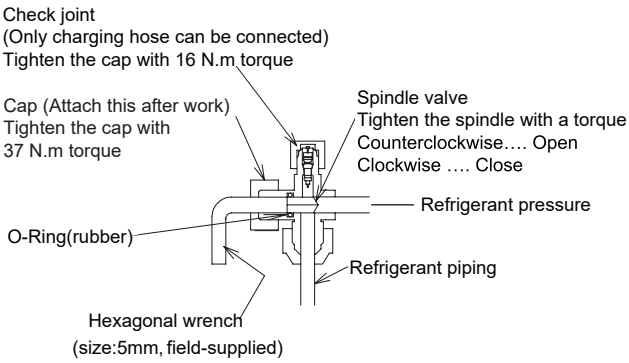

	Tightening Torque (N.m)		
Stop valve (gas/liquid)	①	③	④
	7-9	33-42	14-18

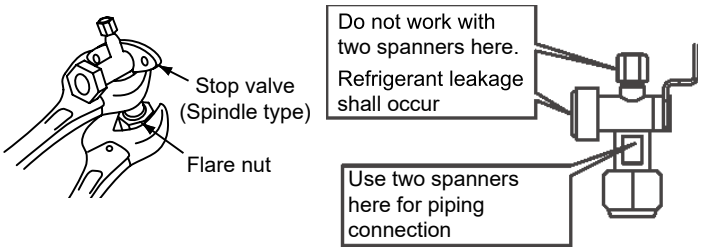

CAUTION

- *At the test run, fully open the spindle of the stop valves. If not fully opened, the outdoor unit will be damaged.*
- *Do not apply an abnormal big force to the spindle valve at the end of the opening.*

8.2.8.3.2 BRAZING WORK

CAUTION

- Use nitrogen gas for blowing during pipe brazing. If oxygen, acetylene or fluorocarbon gas is used, it will cause an explosion or poisonous gas.
- A lot of oxidation film will occur inside of tubes if no nitrogen gas blowing is performed during brazing work. This film will be flecked off after operation and will circulate in the cycle, resulting in clogged expansion valves, etc. This will cause bad influence to the compressor.
- Use a reducer valve when nitrogen gas blowing is performed during brazing. The gas pressure should be maintained within 0.03 to 0.05MPa. If an excessively high pressure is applied to a pipe, it will cause an explosion.

8.2.8.4 AIR-TIGHTNESS TEST

1. Connect the manifold gauge using charging hoses with a nitrogen cylinder to the check joint of the gas stop valve. Apply nitrogen gas pressure of 4.15MPa.
2. Check for any gas leakage at the flare nut connections, or brazed parts by gas leak detector or foaming agent.
3. After the air-tightness test, release nitrogen gas.

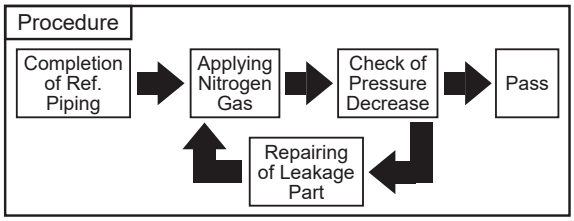

NOTE

- *Do not open the stop valves during the air-tightness test.*

8.2.8.5 VACUUM PUMPING AND REFRIGERANT CHARGE

1. Connect the manifold gauge using charging hoses with a vacuum pump to the check joint of the gas stop valve.
2. Continue vacuum pumping work until the pressure reaches -0.1MPa or lower for one to two hours.

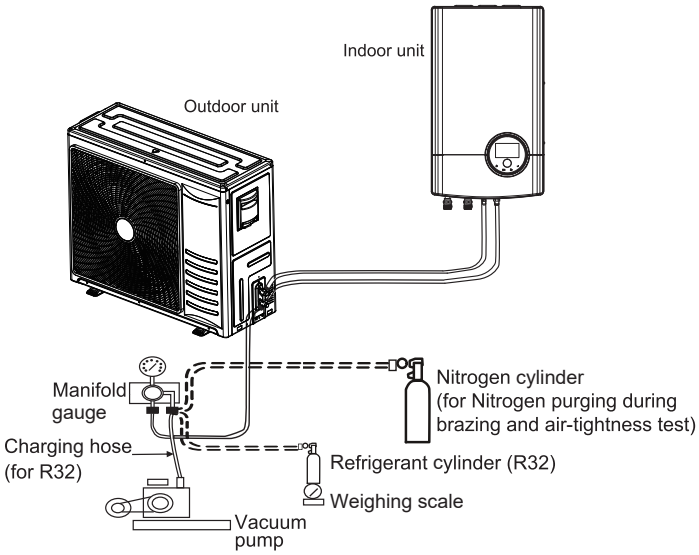

3. After vacuum pumping work, stop the manifold gauge's valve, stop the vacuum pump and leave it for one hour. Check to ensure that the pressure in the manifold gauge does not increase.
4. Fully open the gas stop valve and liquid stop valve.
5. Add refrigerant according to the piping diameter and piping length in the field connecting.
6. Check for any gas leakage by gas leak detector or foaming agent. Use the foaming agent which does not generate NH3 by chemical reaction.

NOTE

- When the spindle cap for stop valve is removed, the gas accumulated at O-ring or screws is released and may make sound. This phenomenon is NOT a gas leakage.
- This unit is only for the refrigerant R32. The manifold gauge and the charging hose should be exclusive use for R32.
- If vacuum degree of -0.1MPa is not available, it may be because of gas leakage or entering moisture. Check for any gas leakage once again. If no leakage exists, operate the vacuum pump for more than one to two hours.

8.2.8.6 REFRIGERANT CHARGING QUANTITY

In case of the total piping length(L) is more than the charge-less piping length, the additional refrigerant quantity should be charged according to the table below:

Capacity		44 (2.0HP)	60 (2.5HP)	80 (3.0HP)
Factory Charge	kg	1.23		1.26
Charge-less piping length(L0)	m	15		15
Additional charge for piping length (L-L0)	g/m	20		30
Minimum piping length(Lmin)	m	5		
Maximum piping length(Lmax)	m	40		45
Maximum total refrigerant charge(*)	kg	1.73		2.16
Maximum height difference between outdoor unit and indoor unit				
Outdoor unit is higher than indoor unit"	m	30		
Indoor unit is higher than outdoor unit	m	20		

*In case of total refrigerant amount ≥1.84 kg, there are an additional minimum floor area requirements(more details in the following section).

CAUTION

- *When charging refrigerant, accurately measure refrigerant to be charged.*
- *Overcharging or undercharging of refrigerant can cause compressor trouble.*

8.2.8.6.1 MINIMUM FLOOR AREA REQUIREMENTS

- The following chart and table shows the minimum floor area (A_{min}) required for the installation of an indoor unit from a refrigerant system containing a certain refrigerant charge (m_C) of R32 (A2L refrigerant), and supposing a total room height not lower than 2.2 m. (According to IEC 60335-2-40:2018 and EN 378-1:2016).
- For m_C<1.84 kg, IEC 60335-2-40:2018 and EN 378-1:2016 do not establish any minimum floor area restriction. In that case check local regulations to ensure that no hard restrictions may apply.

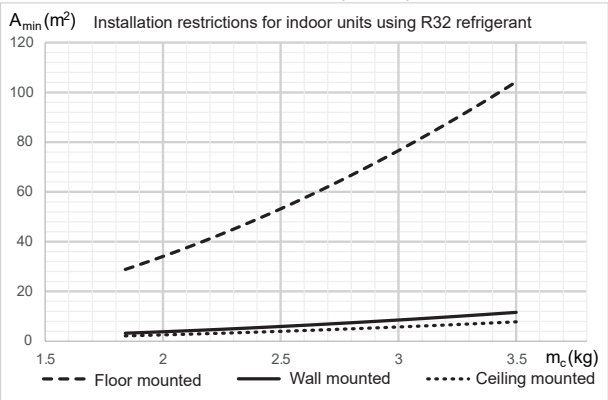

$$A_{min} = (m_c / (2.5 * LFL^{\wedge(5/4)} * h_0)^{\wedge 2} \qquad \text{(EQU.1)}$$

- A_{min}: Minimum installation area of an Indoor unit for a given refrigerant charge m_c (kg) and considering the installation height h_0 (m^2).
- h_0: Installation height of the bottom side of the indoor unit + distance from the indoor unit bottom side to the lowest part for which a refrigerant leak may release to the indoor area.
- m_c: total system refrigerant charge that could be released to the indoor area in case of undetected refrigerant leak.
- LFL: Lower Flammability Limit for R32, 0.307 kg/m^3 as established by EN 378-1:2016 and ISO 817.

Minimum floor area for equipment installed inside			
m_c (kg)	A_{min} (m^2) Floor mounted	A_{min} (m^2) Wall mounted	A_{min} (m^2) Ceiling mounted
1.84	28.81	3.20	2.14
1.9	30.72	3.41	2.29
2.0	34.04	3.78	2.53
2.1	37.53	4.17	2.79
2.2	41.19	4.58	3.06
2.3	45.02	5.00	3.35
2.4	49.02	5.45	3.65
2.5	53.19	5.91	3.96
2.6	57.53	6.39	4.28
2.7	62.04	6.89	4.61
2.8	66.72	7.41	4.96
2.9	71.58	7.95	5.32
3.0	76.6	8.51	5.70
3.1	81.79	9.09	6.08
3.2	87.15	9.68	6.48
3.3	92.68	10.30	6.89
3.4	98.39	10.93	7.32
3.5	104.26	11.58	7.75

- The A_{min} in the table above is calculated according to the formula (EQU.1) under the following conditions:
  - Floor mounted: h0 = 0.6 m
  - Wall mounted: h0 = 1.8 m
  - Ceiling mounted: h0 = 2.2 m
- For safety, the A_{min} must be calculated according to the actual installation by professionals.

⚠ CAUTION

- *Do not charge OXYGEN, ACETYLENE, or other flammable and poisonous gases into the refrigerant because an explosion can occur. It is recommended that oxygen free nitrogen be charged for these types of tests cycle when performing a leakage test or an air-tightness test. These types of gases are extremely dangerous.*
- *Check for refrigerant leakage in detail. If a large refrigerant leakage occurred, it would cause difficulty with breathing or harmful gases would occur if a fire were being used in the room.*

NOTE

- *Fill in the label attached to the unit with the amount of refrigerant charged and Tonnes of CO_2 equivalent of fluorinated greenhouse gases contained on the installation.*

NOTE

- This equipment Contains fluorinated greenhouse gases.
- Refrigerant: R32 ,
  global warming potential (GWP) value :675.
- Weight (kg) of Refrigerant charged before shipment:
  Reference to the nameplate [_ _ _] ① kg.
- Weight (kg) of Refrigerant charged additionally on site:
  Reference to the manual [_ _ _] ② kg.
- Weight (kg) of Refrigerant charged totally:
  ③=(①+②), [_ _ _] kg.
- Tonnes of CO_2 equivalent of fluorinated greenhouse gases contained :③×675/1000, [_ _ _] tCO_2eq.

⚠ DANGER

- ***Only use R32 as refrigerant. Other substances may cause explosions and accidents.***
- ***R32 is fluorinated greenhouse gases. Its global warming potential (GWP) value is 675.***
  Do NOT vent these gases into the atmosphere.
- ***Tonnes of CO2 equivalent of fluorinated greenhouse gases contained is calculated by GWP value of the refrigerant × Total refrigerant charge [kg] / 1000 in the label.***

8.2.8.7 CAUTION OF THE PRESSURE BY CHECK JOINT

When the pressure is measured, use the check joint of the gas stop valve.

At that time, connect the pressure gauge according to the following table because of high pressure side and low pressure side changes by operation mode.

Check joint of the gas stop valve:

Cooling operation	Heating operation
Low pressure	High pressure

NOTE

Be careful that refrigerant and oil do not splash to the electrical parts at removing the charge hoses.

8.2.9 ELECTRICAL WIRING

8.2.9.1 GENERAL CHECK

- Make sure that the following conditions related to power supply installation are satisfied.
  - Ensure that the power supply voltage is within ±10% of the rated voltage and the earth wire is connected.
  - Check cable capacity.
  - The impedance of the power supply line is low enough to avoid any voltage drop of more than 15% of the rated voltage.

DANGER

- ***Do not adjust any wiring or connections unless the main power switch is OFF.***
- ***Check that the earth wire is securely connected, tagged and locked in accordance with national and local codes.***
- ***When using more than one power source, check and ensure that all of them are turned OFF before operating the unit.***
- ***Avoid wiring installation in contact with the refrigerant pipes, water pipes, edges of plates and electrical components inside the unit to prevent damage, which may cause electric shock or short circuit.***

CAUTION

- *Check to ensure that screws for terminal board are tightly tightened.*
- *Check to ensure that the outdoor fan have stopped before electrical wiring work or periodical check is performed.*
- *Protect the wires, drain pipe, electrical parts, from rats or other small animals. If not protected, rats may damage unprotected parts, and at the worst, a fire will occur.*
- *Wrap the accessory packing around the wires, and plug the wiring connection hole with the seal material to protect the product from any condensed water and insects.*
- *Tightly secure the wires with the cord clamp inside the unit.*
- *Lead the wires through the knockout hole to the wiring cover when using conduit.*
- *Electrical wiring must comply with national and local codes. Contact your local authority in regards to standards, rules, regulations, etc.*
- *Check that the earth wire is securely connected.*
- *Connect a fuse of specified capacity.*
- *Turn OFF the main power switch to the indoor unit and the outdoor unit and wait for more than 10 minutes before electrical wiring work or a periodical check is performed.*
- *Use a dedicated power circuit for the unit. Do not use a power circuit shared with the outdoor unit or any other appliance.*
- *Make sure that all wiring and protection devices are properly selected, connected, identified and fixe to the corresponding terminals of the unit, specially the protection (earth) and power wiring, taking into account the applicable national and local regulations. Establish proper earthing; Incomplete earthing may cause electrical shock.*
- *Keep a distance between each wiring terminal and attach insulation tape or sleeve as shown in the figure.*

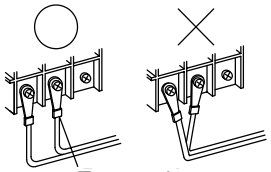

- *Check to ensure that the electrical resistance is more than 1 MΩ, by measuring the resistance between ground and the terminal of the electrical parts. If not, do not operate the system until the electrical leakage is found and repaired.*

8.2.9.2 COMMON WIRING

- Use shielded twisted pair wire (more than 0.75 mm²) for transmission wiring between outdoor unit and indoor unit.
- Use 2-core wire for the transmission cable (Do not use wire with more than 3 cores).
- Use shielded twisted pair cable for transmission wiring to protect the units from noise obstacle at length of less than 300 m and size complied with local code.
- H-NET shielded twisted pair cable must be grounded in the outdoor unit side.

CAUTION

- Pay attention to the connection of the transmission wires. Incorrect connection may cause the failure of printed circuit board.
- Check to ensure that the field-supplied electrical components (mains power switches, circuit breakers, wires, connectors and wire terminals) have been properly selected according to the electrical data indicated in this chapter and they comply with national and local codes. If it is necessary, contact with your local authority in regards to standards, rules, regulations, etc.

The electrical wiring connection between the outdoor unit and the indoor unit is shown in figure below:

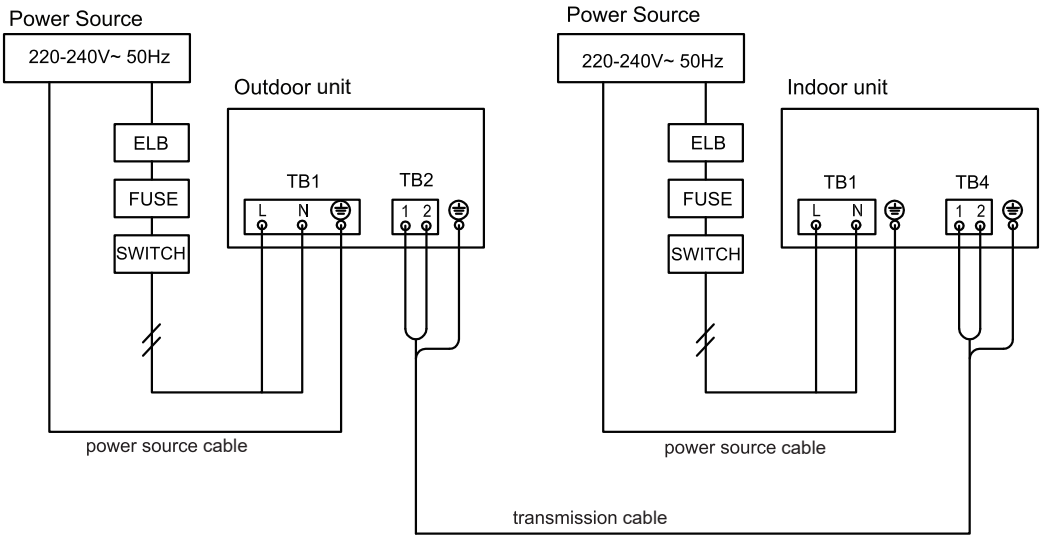

Shielded twisted pair cable 0.75mm^2 x 2.
This cable dose not need any polarity.
Do not apply an excessively high voltage to this cable (Rated Voltage:5V).

8.2.9.3 ELECTRICAL WIRING CONNECTION FOR OUTDOOR UNITS

The electrical wiring connection for the outdoor unit is shown in the figure below:

- External view:

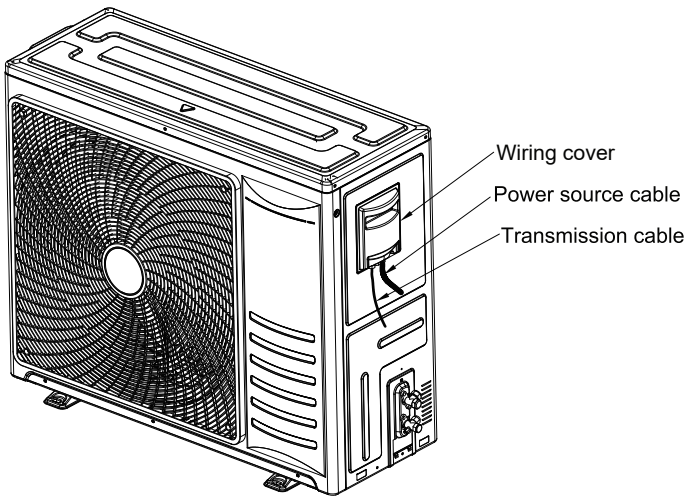

NOTE

- *Knock out the holes of the wiring cover before wiring connection.*

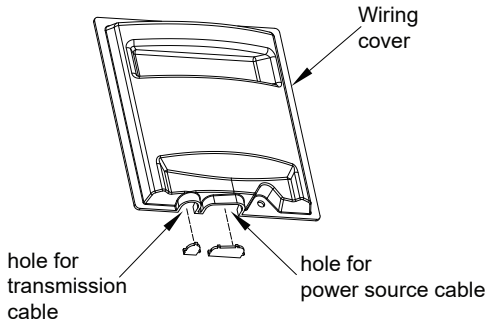

CAUTION

- *The wiring cover must be installed back after the wiring connection work, and make sure it is firmly fixed. Otherwise, the water or dust may enter, and cause an electric shock.*

- Inner view:

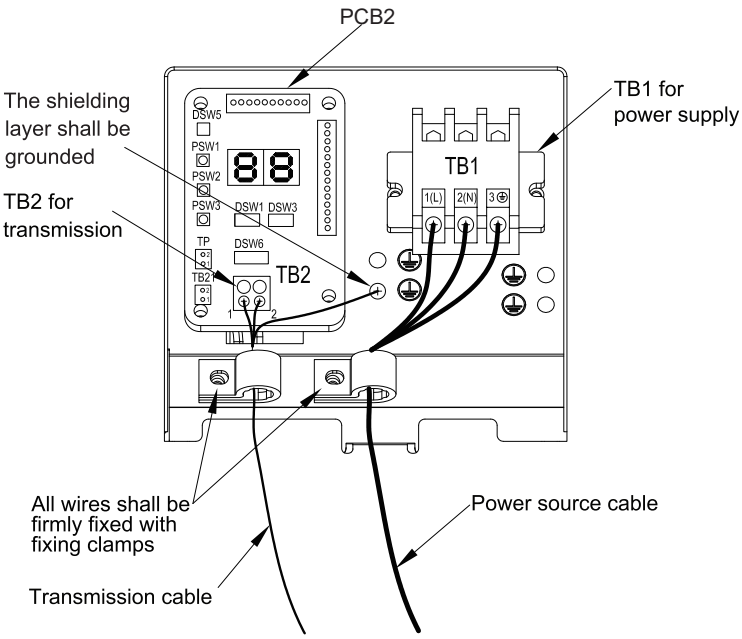

NOTE

- *All wires shall be firmly fixed with fixing clamps, and ensure that each wire is reliably grounded.*

CAUTION

- *Do not connect the power source cable to the TB2. If connected, the printed circuit board will be damaged.*

8.2.9.4 WIRING SIZE AND MAIN SWITCH PROTECTION

Recommended minimum sizes for field-supplied wires and select the main switches according to the table below:

Capacity	Power supply	Power source cable size	Transmission cable size	MC (A)	CB (A)	ELB (nº poles/A/mA)
		EN60335-1	EN60335-1			
44(2.0HP)	220-240V~ 50Hz	2.5 mm2	0.75 mm2	9.8	16	2/16/30
60(2.5HP)		2.5 mm2		12.0	16	2/16/30
80(3.0HP)		4.0 mm2		16.8	20	2/20/30

NOTE

- *ELB: earth leakage breaker; CB: circuit breaker; MC: maximum current.*
- *Follow local codes and regulations when selecting field wires, circuit breakers and earth leakage breakers.*
- *Use the wires which are not lighter than the ordinary polychloroprene sheathed flexible cord (code designation 60245 IEC 57).*

CAUTION

- *Ensure specifically that there is an earth leakage breaker (ELB) installed for the units (outdoor unit).*
- *If the installation is already equipped with an earth leakage breaker (ELB), ensure that its rated current is large enough to hold the current of the units (outdoor unit).*

NOTE

- *Electric fuses can be used instead of magnetic circuit breakers (CB). In that case, select fuses with similar rated values as the CB.*
- *The earth leakage breaker (ELB) mentioned in this manual is also commonly known as residual current device (RCD) or residual current circuit breaker (RCCB).*
- *The circuit breakers (CB) are also known as thermal-magnetic circuit breakers or just magnetic circuit breakers (MCB).*

NOTE

- *Where power supply cable is connected through junction box in series, be sure to determine the total current and choose wires based on the table below.*

Selection according to EN 60335-1.

Current i (A)	Wire size (mm^2)
i ≤ 6	2.5
6 < i ≤ 10	2.5
10 < i ≤ 16	2.5
16 < i ≤ 25	4
25 < i ≤ 32	6
32 < i ≤ 40	10
40 < i ≤ 63	16
63 < i	※1

※1: In the case that current exceeds 63A, do not connect cables in series.

- *As a minimum, the chosen wires shall not be lighter than the polychloroprene sheathed flexible cord (code designation 60245 IEC 57).*
- *The wiring specifications for weak-current communication circuit shall not be lower than that for RVV(S)P shielded wires or equivalent, and the shielding layer shall be grounded.*
- *A switch that can ensure all-pole disconnection shall be installed between power supply and air conditioning unit in such a manner that the contact spacing shall not be less than 3 mm.*
- *Once the power cord is damaged, the dealer or the professionals from designated maintenance department must be contacted in a timely manner for repair and replacement.*
- *For the installation of power cord, the ground wire must be longer than the current-carrying conductor.*

8.2.9.5 SETTING OF DIP SWITCHES

NOTE

- *The mark "■" indicates the dip switches positions.*
- *No mark "■" indicates pin position is not affected.*
- *The figures show the settings before shipment or after selection.*
- *"Not used" means that the pin must not be changed. A malfunction might occur if changed.*

CAUTION

Before setting dip switches, first turn the power supply OFF and then set the position of dip switches. If the switches are set without turning the power supply OFF, the contents of the setting are invalid.

8.2.9.5.1 DIP Switch Setting of PCB2

(1) DSW1: Unit model setting
No setting is required.

Setting before shipment	

(2) DSW3: Capacity setting
No setting is required.

Capacity	44(2.0HP)	60(2.5HP)	80(3.0HP)
Setting before shipment			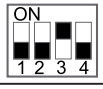

(3) DSW5: End resistance setting
No setting is required.

Setting before shipment	

(4) DSW6: Refrigeration system No. setting
Setting is required. Use binary encoding method.

Setting before shipment	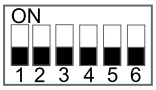

Max No.63 are available to set when all the equipment are connected to corresponding H-NET.

NOTE

- *Binary encoding method for Refrigeration system No.:*
  Refrigeration system No.=∑ the value of the pin × $2^{(pin\ number-1)}$ the value of the pin: the value is equal to 1 when the pin is set as ON, otherwise the value is equal to 0.
  Pin number: the figure below the pin, marked as 1~6.
  Ex.) Set refrigeration system No. as 8.

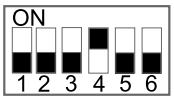

Calculation in binary: $8=0\times2^{(1-1)}+0\times2^{(2-1)}+0\times2^{(3-1)}+1\times2^{(4-1)}+0\times2^{(5-1)}+0\times2^{(6-1)}$

8.2.10 TEST RUN

When installation is completed, perform test run according to the wired remote controller's manual, and hand over the system to the customer.

CAUTION

Do not operate the system until all the check points have been cleared:

- *Check to ensure that the electrical resistance is more than 1 MΩ, by measuring the resistance between ground and the terminal of the electrical parts. If not, do not operate the system until the electrical leakage is found and repaired. Do not impress the voltage on the terminals for transmission 1 and 2.*
- *Check to ensure that the stop valves of the outdoor unit are fully opened, and then start the system.*
- *Pay attention to the following items while the system is running:*
  - *Do not touch any of the parts by hand at the discharge gas side, since the compressor chamber and the pipes at the discharge side are heated higher than 90°C.*
  - *DO NOT PUSH THE BUTTON OF THE MAGNETIC SWITCH(ES), it will cause a serious accident.*
  - *Do not touch any electrical components within 10 minutes after turning OFF the main switch.*
  - *Confirm that the gas line stop valve and the liquid line stop valve are fully open.*
  - *Confirm that the leakage of the refrigerant does not exist. The flare nuts are sometimes loosened by vibration during transportation.*
  - *Check that the refrigerant piping and the electrical wiring conform to the same system.*
  - *Confirm that the dip switch settings on the printed circuit board of the indoor unit and the outdoor unit are correct.*
  - *Check whether or not the electrical wirings of the indoor unit and the outdoor unit are connected properly.*

8.2.11 MAIN SAFETY DEVICES

◆ **Compressor protection**

High pressure switch:

This switch cuts out the operation of the compressor when the discharge pressure exceeds the setting.

◆ **Fan motor protection**

When the thermistor temperature is reached to the setting, motor output is decreased.

Otherwise, when the temperature becomes lower, limitation is cancelled.

Capacity				44(2.0HP)	60(2.5HP)	80(3.0HP)
For compressor						
	Pressure switches		-	Automatic Reset, Non-Adjustable		
	High	Cut Out	MPa	4.4±0.15		
		Cut-In	MPa	3.4±0.2		
	Low	Cut Out	MPa	0.05±0.03		
		Cut-In	MPa	0.15±0.03		
	Fuse on Main Circuit 220-240V ~ 50Hz		A	30		
	CCP Timer		-	Non-Adjustable		
	Setting Time		min.	3		
For condenser fan motor Internal Thermostat			-	Automatic Reset, Non-Adjustable		

8.2.12 TECHNICAL PARAMETERS

Technical parameters

Outdoor unit:	AHW-044HCDS1			Indoor unit:	AHM-044HCDSAA		
Outdoor side heat exchanger of air conditioner/heat pump: air							
Indoor side heat exchanger of air conditioner/heat pump: water							
Type: compressor driven vapour compression							
Driver of compressor:electric motor							
Indication if the heater is equipped with a supplementary heater:yes							
Parameters shall be declared for the average heating season							
Item	Symbol	Value	Unit	Item	Symbol	Value	unit
Heating							
Parameters shall be declared for:				Low temperature application			
Indoor heat exchanger:				Variable outlet			
Rated heating capacity	$P_{rated,h}$	4	kW	Seasonal space heating energy efficiency	$\eta_{s,h}$	197	%
Declared heating capacity for part load at indoor temperature 20 °C and outdoor temperature Tj				Declared coefficient of performance/Average season, at indoor temperature 20 °C and outdoor temperature Tj			
Tj = – 7°C	Pdh	3.9	kW	Tj = – 7°C	COPd	3.29	—
Tj = 2°C	Pdh	2.4	kW	Tj = 2°C	COPd	4.80	—
Tj = 7°C	Pdh	1.7	kW	Tj = 7°C	COPd	6.44	—
Tj = 12°C	Pdh	2.2	kW	Tj = 12°C	COPd	9.92	—
Tj = bivalent temperature	Pdh	3.9	kW	Tj = bivalent temperature	COPd	3.29	—
Tj = operating limit	Pdh	4.3	kW	Tj = operating limit	COPd	2.62	—
Bivalent temperature				Operating limit temperature			
heating/Average	Tbiv	-7	°C	heating/Average	Tol	-10	°C
heating/Warmer	Tbiv	—	°C	heating/Warmer	Tol	—	°C
heating/Colder	Tbiv	—	°C	heating/Colder	Tol	—	°C
Degradation co-efficient	Cd	0.9					
Power consumption in modes other than 'active mode'							
Off mode	P_{OFF}	0.010	kW	Standby mode	PSB	0.010	kW
Thermostat-off mode(heating)	P_{TO}	0.011	kW	Crankcase heater mode	PCK	0.001	kW
Supplementary heater							
Supplementary capacity	P_{SUP}	0.1	kW	Type of energy input	Electric		
Other items							
Capacity control		Variable		Air flow rate, outdoor		2700	m^3/h
Reference annual heating demand	Q_H	9119	kWh	Sound power level , indoor/ outdoor measured	LWA	42/61	dB(A)
Annual energy consumption	Q_{HE}	1824	kWh	Global warming potential	GWP	675	$kgCO_2$ eq.
Contact details	Qingdao Hisense Hitachi Air-conditioning Systems Co., Ltd No. 218, Qianwangang Road, Economic and Technological Development Zone, Qingdao, China						

Technical parameters

Outdoor unit:	AHW-044HCDS1			Indoor unit:	AHM-044HCDSAA		
Outdoor side heat exchanger of air conditioner/heat pump: air							
Indoor side heat exchanger of air conditioner/heat pump: water							
Type: compressor driven vapour compression							
Driver of compressor:electric motor							
Indication if the heater is equipped with a supplementary heater: yes							
Parameters shall be declared for the average heating season							
Item	Symbol	Value	Unit	Item	Symbol	Value	unit
Heating							
Parameters shall be declared for:				Medium temperature application			
Indoor heat exchanger:				Variable outlet			
Rated heating capacity	$P_{rated,h}$	4	kW	Seasonal space heating energy efficiency	$\eta_{s,h}$	126	%
Declared heating capacity for part load at indoor temperature 20 °C and outdoor temperature Tj				Declared coefficient of performance/Average season, at indoor temperature 20 °C and outdoor temperature Tj			
Tj = – 7°C	Pdh	3.4	kW	Tj = – 7°C	COPd	1.97	—
Tj = 2°C	Pdh	2.1	kW	Tj = 2°C	COPd	3.22	—
Tj = 7°C	Pdh	1.4	kW	Tj = 7°C	COPd	3.97	—
Tj = 12°C	Pdh	2.0	kW	Tj = 12°C	COPd	7.24	—
Tj = bivalent temperature	Pdh	3.4	kW	Tj = bivalent temperature	COPd	1.97	—
Tj = operating limit	Pdh	3.5	kW	Tj = operating limit	COPd	1.68	—
Bivalent temperature				Operating limit temperature			
heating/Average	Tbiv	-7	°C	heating/Average	Tol	-10	°C
heating/Warmer	Tbiv	—	°C	heating/Warmer	Tol	—	°C
heating/Colder	Tbiv	—	°C	heating/Colder	Tol	—	°C
Degradation co-efficient	Cd	0.9					
Power consumption in modes other than 'active mode'							
Off mode	P_{OFF}	0.010	kW	Standby mode	P_{SB}	0.010	kW
Thermostat-off mode(heating)	P_{TO}	0.011	kW	Crankcase heater mode	P_{CK}	0.001	kW
Supplementary heater							
Supplementary capacity	P_{SUP}	0.3	kW	Type of energy input	Electric		
Other items							
Capacity control		Variable		Air flow rate, outdoor		2700	m^3/h
Reference annual heating demand	Q_H	7944	kWh	Sound power level , indoor/ outdoor measured	LWA	42/61	dB(A)
Annual energy consumption	Q_{HE}	2457	kWh	Global warming potential	GWP	675	$kgCO_2$ eq.
Contact details	Qingdao Hisense Hitachi Air-conditioning Systems Co., Ltd No. 218, Qianwangang Road, Economic and Technological Development Zone, Qingdao, China						

Technical parameters

Outdoor unit:	AHW-060HCDS1			Indoor unit:	AHM-060HCDSAA		
Outdoor side heat exchanger of air conditioner/heat pump: air							
Indoor side heat exchanger of air conditioner/heat pump: water							
Type: compressor driven vapour compression							
Driver of compressor:electric motor							
Indication if the heater is equipped with a supplementary heater: yes							
Parameters shall be declared for the average heating season							
Item	Symbol	Value	Unit	Item	Symbol	Value	unit
Heating							
Parameters shall be declared for:				Low temperature application			
Indoor heat exchanger:				Variable outlet			
Rated heating capacity	$P_{rated,h}$	6	kW	Seasonal space heating energy efficiency	$\eta_{s,h}$	194	%
Declared heating capacity for part load at indoor temperature 20 °C and outdoor temperature Tj				Declared coefficient of performance/Average season, at indoor temperature 20 °C and outdoor temperature Tj			
Tj = – 7°C	Pdh	5.4	kW	Tj = – 7°C	COPd	3.13	—
Tj = 2°C	Pdh	3.3	kW	Tj = 2°C	COPd	4.67	—
Tj = 7°C	Pdh	2.0	kW	Tj = 7°C	COPd	6.63	—
Tj = 12°C	Pdh	2.2	kW	Tj = 12°C	COPd	9.92	—
Tj = bivalent temperature	Pdh	5.4	kW	Tj = bivalent temperature	COPd	3.13	—
Tj = operating limit	Pdh	5.3	kW	Tj = operating limit	COPd	2.66	—
Bivalent temperature				Operating limit temperature			
heating/Average	Tbiv	-7	°C	heating/Average	Tol	-10	°C
heating/Warmer	Tbiv	—	°C	heating/Warmer	Tol	—	°C
heating/Colder	Tbiv	—	°C	heating/Colder	Tol	—	°C
Degradation co-efficient	Cd	0.9					
Power consumption in modes other than ‘active mode’							
Off mode	P_{OFF}	0.010	kW	Standby mode	P_{SB}	0.010	kW
Thermostat-off mode(heating)	P_{TO}	0.011	kW	Crankcase heater mode	P_{CK}	0.001	kW
Supplementary heater							
Supplementary capacity	P_{SUP}	0.7	kW	Type of energy input	Electric		
Other items							
Capacity control		Variable		Air flow rate, outdoor		2700	m^3/h
Reference annual heating demand	Q_H	12507	kWh	Sound power level , indoor/ outdoor measured	LWA	42/62	dB(A)
Annual energy consumption	Q_{HE}	2539	kWh	Global warming potential	GWP	675	$kgCO_2$ eq.
Contact details	Qingdao Hisense Hitachi Air-conditioning Systems Co., Ltd No. 218, Qianwangang Road, Economic and Technological Development Zone, Qingdao, China						

Technical parameters

Outdoor unit:	AHW-060HCDS1			Indoor unit:	AHM-060HCDSAA		
Outdoor side heat exchanger of air conditioner/heat pump: air							
Indoor side heat exchanger of air conditioner/heat pump: water							
Type: compressor driven vapour compression							
Driver of compressor:electric motor							
Indication if the heater is equipped with a supplementary heater: yes							
Parameters shall be declared for the average heating season							
Item	Symbol	Value	Unit	Item	Symbol	Value	unit
Heating							
Parameters shall be declared for:				Medium temperature application			
Indoor heat exchanger:				Variable outlet			
Rated heating capacity	$P_{rated,h}$	5	kW	Seasonal space heating energy efficiency	$\eta_{s,h}$	130	%
Declared heating capacity for part load at indoor temperature 20 °C and outdoor temperature Tj				Declared coefficient of performance/Average season, at indoor temperature 20 °C and outdoor temperature Tj			
Tj = – 7°C	Pdh	4.7	kW	Tj = – 7°C	COPd	2.04	—
Tj = 2°C	Pdh	3.0	kW	Tj = 2°C	COPd	3.21	—
Tj = 7°C	Pdh	2.0	kW	Tj = 7°C	COPd	4.34	—
Tj = 12°C	Pdh	2.0	kW	Tj = 12°C	COPd	7.24	—
Tj = bivalent temperature	Pdh	4.7	kW	Tj = bivalent temperature	COPd	2.04	—
Tj = operating limit	Pdh	4.5	kW	Tj = operating limit	COPd	1.75	—
Bivalent temperature				Operating limit temperature			
heating/Average	Tbiv	-7	°C	heating/Average	Tol	-10	°C
heating/Warmer	Tbiv	—	°C	heating/Warmer	Tol	—	°C
heating/Colder	Tbiv	—	°C	heating/Colder	Tol	—	°C
Degradation co-efficient	Cd	0.9					
Power consumption in modes other than 'active mode'							
Off mode	P_{OFF}	0.010	kW	Standby mode	P_{SB}	0.010	kW
Thermostat-off mode(heating)	P_{TO}	0.011	kW	Crankcase heater mode	P_{CK}	0.001	kW
Supplementary heater							
Supplementary capacity	P_{SUP}	0.8	kW	Type of energy input	Electric		
Other items							
Capacity control		Variable		Air flow rate, outdoor		2700	m^3/h
Reference annual heating demand	Q_H	11032	kWh	Sound power level , indoor/ outdoor measured	LWA	42/62	dB(A)
Annual energy consumption	Q_{HE}	3312	kWh	Global warming potential	GWP	675	$kgCO_2$ eq.
Contact details	Qingdao Hisense Hitachi Air-conditioning Systems Co., Ltd No. 218, Qianwangang Road, Economic and Technological Development Zone, Qingdao, China						

Technical parameters

Outdoor unit:	AHW-080HCDS1			Indoor unit:	AHM-080HCDSAA		
Outdoor side heat exchanger of air conditioner/heat pump: air							
Indoor side heat exchanger of air conditioner/heat pump: water							
Type: compressor driven vapour compression							
Driver of compressor:electric motor							
Indication if the heater is equipped with a supplementary heater: yes							
Parameters shall be declared for the average heating season							
Item	Symbol	Value	Unit	Item	Symbol	Value	unit
Heating							
Parameters shall be declared for:				Low temperature application			
Indoor heat exchanger:				Variable outlet			
Rated heating capacity	$P_{rated,h}$	7	kW	Seasonal space heating energy efficiency	$\eta_{s,h}$	194	%
Declared heating capacity for part load at indoor temperature 20 °C and outdoor temperature Tj				Declared coefficient of performance/Average season, at indoor temperature 20 °C and outdoor temperature Tj			
Tj = – 7°C	Pdh	5.8	kW	Tj = – 7°C	COPd	3.14	—
Tj = 2°C	Pdh	3.5	kW	Tj = 2°C	COPd	4.84	—
Tj = 7°C	Pdh	2.3	kW	Tj = 7°C	COPd	5.98	—
Tj = 12°C	Pdh	2.0	kW	Tj = 12°C	COPd	9.67	—
Tj = bivalent temperature	Pdh	5.8	kW	Tj = bivalent temperature	COPd	3.14	—
Tj = operating limit	Pdh	6.2	kW	Tj = operating limit	COPd	2.66	—
Bivalent temperature				Operating limit temperature			
heating/Average	Tbiv	-7	°C	heating/Average	Tol	-10	°C
heating/Warmer	Tbiv	—	°C	heating/Warmer	Tol	—	°C
heating/Colder	Tbiv	—	°C	heating/Colder	Tol	—	°C
Degradation co-efficient	Cd	0.9					
Power consumption in modes other than 'active mode'							
Off mode	P_{OFF}	0.010	kW	Standby mode	P_{SB}	0.010	kW
Thermostat-off mode(heating)	P_{TO}	0.011	kW	Crankcase heater mode	P_{CK}	0.001	kW
Supplementary heater							
Supplementary capacity	P_{SUP}	0.3	kW	Type of energy input	Electric		
Other items							
Capacity control		Variable		Air flow rate, outdoor		2700	m^3/h
Reference annual heating demand	Q_H	13441	kWh	Sound power level , indoor/ outdoor measured	LWA	42/64	dB(A)
Annual energy consumption	Q_{HE}	2732	kWh	Global warming potential	GWP	675	$kgCO_2$ eq.
Contact details	Qingdao Hisense Hitachi Air-conditioning Systems Co., Ltd No. 218, Qianwangang Road, Economic and Technological Development Zone, Qingdao, China						

Technical parameters

Outdoor unit:	AHW-080HCDS1			Indoor unit:	AHM-080HCDSAA		
Outdoor side heat exchanger of air conditioner/heat pump: air							
Indoor side heat exchanger of air conditioner/heat pump: water							
Type: compressor driven vapour compression							
Driver of compressor:electric motor							
Indication if the heater is equipped with a supplementary heater: yes							
Parameters shall be declared for the average heating season							
Item	Symbol	Value	Unit	Item	Symbol	Value	unit
Heating							
Parameters shall be declared for:				Medium temperature application			
Indoor heat exchanger:				Variable outlet			
Rated heating capacity	$P_{rated,h}$	6	kW	Seasonal space heating energy efficiency	$\eta_{s,h}$	134	%
Declared heating capacity for part load at indoor temperature 20 °C and outdoor temperature Tj				Declared coefficient of performance/Average season, at indoor temperature 20 °C and outdoor temperature Tj			
Tj = – 7°C	Pdh	5.2	kW	Tj = – 7°C	COPd	1.85	—
Tj = 2°C	Pdh	3.2	kW	Tj = 2°C	COPd	3.40	—
Tj = 7°C	Pdh	2.1	kW	Tj = 7°C	COPd	4.50	—
Tj = 12°C	Pdh	2.1	kW	Tj = 12°C	COPd	7.71	—
Tj = bivalent temperature	Pdh	5.2	kW	Tj = bivalent temperature	COPd	1.85	—
Tj = operating limit	Pdh	5.7	kW	Tj = operating limit	COPd	1.54	—
Bivalent temperature				Operating limit temperature			
heating/Average	Tbiv	-7	°C	heating/Average	Tol	-10	°C
heating/Warmer	Tbiv	—	°C	heating/Warmer	Tol	—	°C
heating/Colder	Tbiv	—	°C	heating/Colder	Tol	—	°C
Degradation co-efficient	Cd	0.9					
Power consumption in modes other than 'active mode'							
Off mode	P_{OFF}	0.010	kW	Standby mode	P_{SB}	0.010	kW
Thermostat-off mode(heating)	P_{TO}	0.011	kW	Crankcase heater mode	P_{CK}	0.001	kW
Supplementary heater							
Supplementary capacity	P_{SUP}	0.2	kW	Type of energy input	Electric		
Other items							
Capacity control		Variable		Air flow rate, outdoor		2700	m^3/h
Reference annual heating demand	Q_H	12081	kWh	Sound power level , indoor/ outdoor measured	LWA	42/64	dB(A)
Annual energy consumption	Q_{HE}	3536	kWh	Global warming potential	GWP	675	$kgCO_2$ eq.
Contact details	Qingdao Hisense Hitachi Air-conditioning Systems Co., Ltd No. 218, Qianwangang Road, Economic and Technological Development Zone, Qingdao, China						

9. Electrical Wiring Diagrams

Model: AHM-044/060/080HCDSAA

Electrical Wiring Diagram

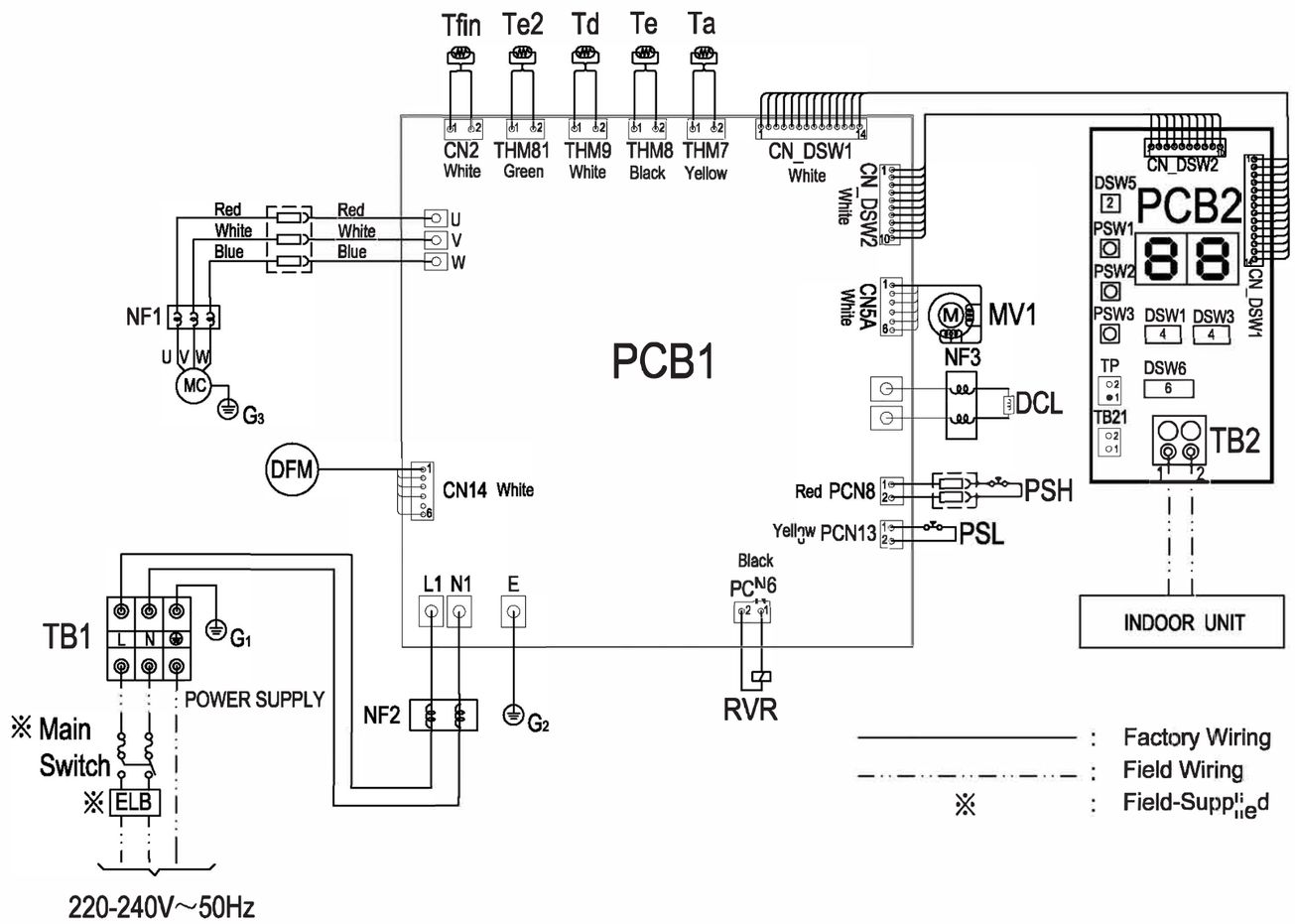

Mark	Name
$TB_{1,2}$	Terminal Board
$PCB_{1,2}$	Printed Circuit Board
DCL	Reactor
MC	Motor for Compressor
DFM	DC Fan Motor
MV1	Micro-Computer Control Expansion Valve
$NF_{1,2,3}$	Magnet ring for Noise Filter
PSH	High Pressure Switch
PSL	Low Pressure Switch
$THM_{7,8,9,81}$	Thermistor
$G_{1\sim3}$	Earth
○	Terminals
RVR	Reversing Valve Relay
CN,PCN	Connector
Tfin	Thermistor for Fin
ELB	Earth Leakage Breaker
$PSW_{1,2,3}$	Push Switch on PCB2
$DSW_{1,3,5,6}$	Dip Switch on PCB2

WARNING

Do not connect the power source line to the TB 2. The TB 2 is for the communication line. If connected, the printed circuit board will be damaged.

WARNING

High voltage danger!
Turn OFF the main power switch to the indoor unit and the outdoor unit and wait for more than 10 minutes before electrical wiring work or a periodical check is performed.

DSW settings (before shipment)

DSW1(Unit model setting)	DSW3(Capacity Setting)			DSW5	DSW6(Ref.Cycle No.Setting)
	44	60	80		
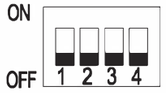	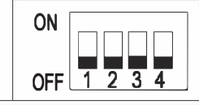	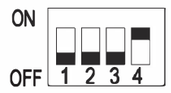	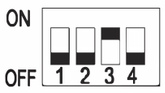	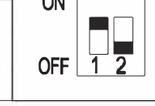	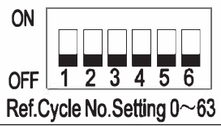 Ref.Cycle No.Setting 0~63

The mark of ▬ indicates the position of dip switchies.

Note:

1. All the field wiring and equipment must comply with local codes.

ELECTRICAL WIRING DIAGRAM

Warning Electrical operation and regular inspection are not allowed until 10 minutes after the main power supply is cut off

——— : Factory Wiring
— — — : Field Wiring
ELB : Leakage Protector
☆ : Optional Parts
（Output/Input/Auxsensor factory setting）
⊕ : Earth Mark

Note:
1.All the field wiring and equipment must comply with local codes.

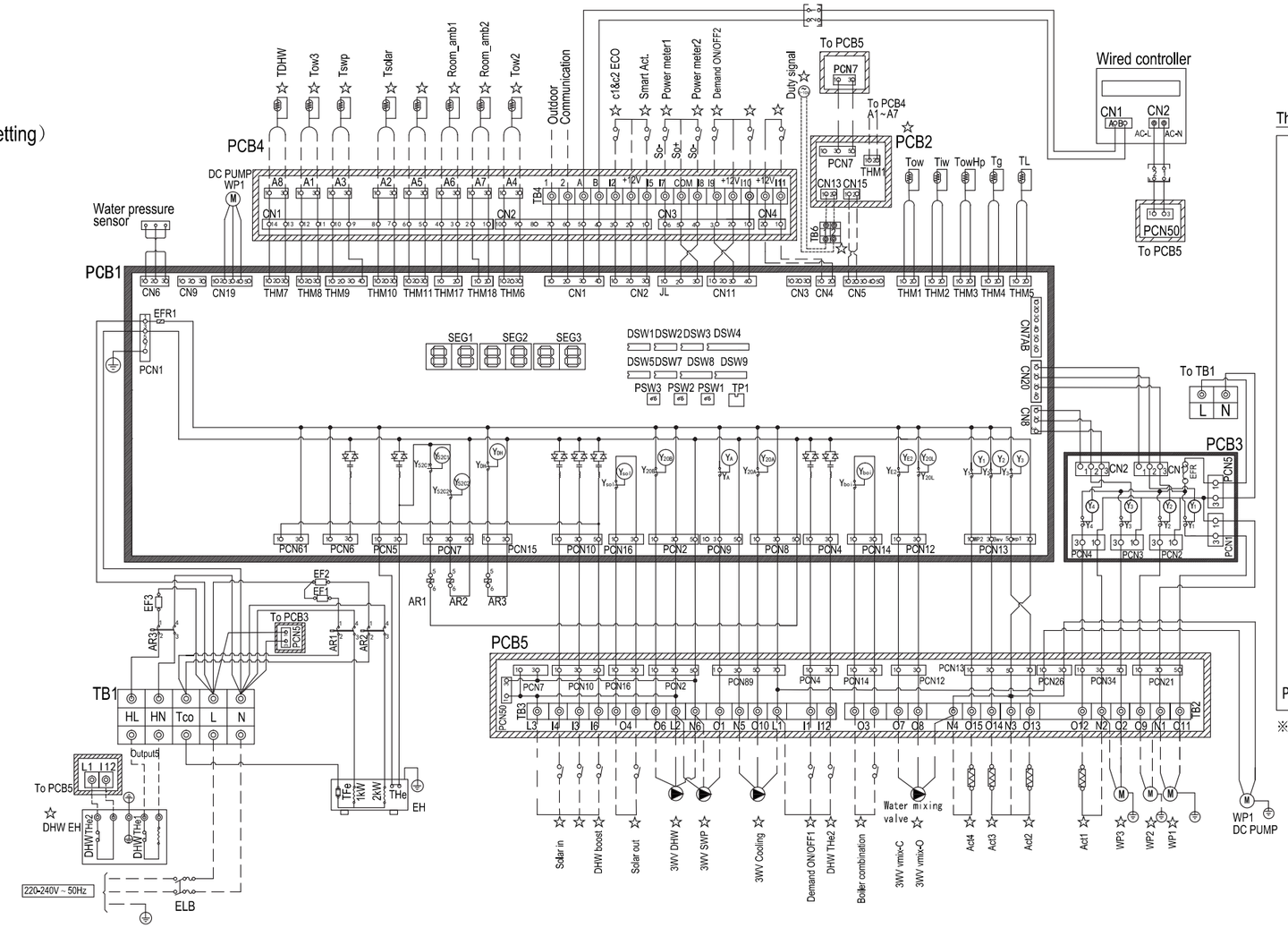

The Layout of Electrical Box

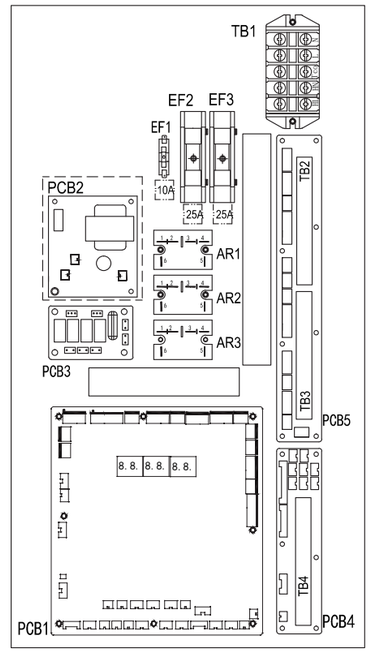

※Only the structural layout is displayed，and the actualassembly of the unit shall prevail.

Mark	Name
AR1,AR2,AR3	Relay
CNxx,THxx,Axx,JL	Connector
PCNxx	Connector
PCB1~5	Printed Circuit Board
TBxx	Terminal
EH	Electric heater of water module
TFe	The fuse inside electric heater
THe	The thermostat of electric heater
DHW EH	Electric heater of DHW tank
DHW THe1 DHW THe2	The thermostat of DHW Electric heater
EFR1,EFR	Fuse(PCB)
EF1,EF2	Fuse（EH）
EF3	Fuse（DHW）
DSW	Dip Switch
3WVDHW	3 Way Valve for DHW
3WVSWP	3 Way Valve for Swimming Pool
3WVCooling	3 Way Valve for Cooling
3WVVmix	3 Way Valve for Mixing Valve
WP1,WP2,WP3	Water Pump
Act1~4	Electrothermal actuator
Yxx	Relay(PCB)
ECO	ECO Operation
Smart	Smart Operation
Solar in	Solar operation input signal
Solar out	Solar operation output signal
Boiler out	Boiler operation output signal
Tiw	Inlet water thermistor
Tow	Outlet water thermistor
TowHp	Outlet HP water thermistor
Tg	Gas pipe thermistor
TL	Liquid pipe thermistor
TDHW	DHW water thermistor
Tow2	C2 outlet water thermistor
Tswp	Swimming Pool water thermistor
Tsolar	Solar thermistor
Tow3	Hydraulic separator thermistor

DIP Switch Settings of PCB1

■ Indicates the position of DIP Switch

(1)DSW1：Unit model setting
No setting is required.

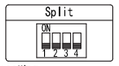

(2)DSW2：Unit capacity setting
No setting is required.

044(2.0 HP)	060(2.5 HP)	080(3.0 HP)

(3)DSW3：Additional setting

Setting before shipment	
ON:Cancel 70 alarm(Water pressure abnormality)	
Anti-freezing settings ON:Whole water cycle does anti-freezing. OFF:Only primary cycle does anti-freezing.	

(4)DSW4：Additional setting

Setting before shipment	
Water pump forced ON	
Auxiliary electric heater forced OFF	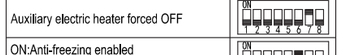
ON:Anti-freezing enabled OFF:Anti-freezing disabled	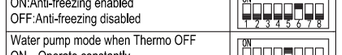
Water pump mode when Thermo OFF ON：Operate constantly OFF:Operate periodically	
Manual emergency setting ON：Manual emergency enabled OFF:Manual emergency disabled	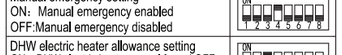
DHW electric heater allowance setting ON：DHW electric heater cancel forced OFF OFF:DHW electric heater forced OFF	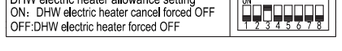

DHW 3-way valve forced ON	
Start air purge	

(5)DSW5：Additional setting

Setting before shipment	
ON:Cancel 75/78 alarm(Water pump abnormalities)	
ON:WP3 operates in space cooling mode.	

(6)DSW6：Fuse reset

Setting before shipment	

(7)DSW7：Not used

Setting before shipment	

(8)DSW8：Refrigeration system No.setting
Setting is required.
Use binary encoding method.Before shipment are all OFF.

Max No.63 are available to set when all the equipment are connected to corresponding Central Control System.
EX：Set refrigeration system no. as 8.

(9)DSW9：Indoor unit No.setting
No setting is required.

Setting before shipment	

Hisense

Model: AHZ-044/080HCDS1

Mark	Name
AR1, AR2, AR3	Relay
CN, THM, A_x, JL	Connector
PCN	Connector
PCB	Printed Circuit Board
TB	Terminal
AEH	Auxiliary electric heater
TFe	The temperture fuse of electric heater
THe	The thermostat of electric heater
DHW EH	Electric heater of DHW Tank
DHW_{The1}, DHW_{The2}	The thermostat of DHW Electric heater
EFR1, EFR	Fuse (PCB)
EF_2	Fuse (EHA)
EF_3	Fuse (DHW)
DSW	Dip Switch
$3WV_{DHW}$	3 Way Valve for DHW
$3WV_{SWP}$	3 Way Valve for Swimming Pool
$3WV_{Cooling}$	3 Way Valve for Cooling
$3WV_{mix}$	3 Way Valve for Mixing Valve
WP1, WP2, WP3	Water Pump

$Act_{1\sim4}$	Electrothermal actuator
Y_{xx}	Relay (PCB)
ECO	ECO Operation
Smart	Smart Operation
Solar in	Solar operation input signal
Solar out	Solar operation output signal
Boiler out	Boiler operation output signal
Tiw	Inlet water thermistor
Tow	Outlet water thermistor
TowHp	Outlet HP water thermistor
Tg	Gas pipe thermistor
TL	Liquid pipe thermistor
TDHW	DHW water thermistor
Tow2	C2 outlet water thermistor
Tswp	Swimming Pool water thermistor
Tsolar	Solar thermistor
Tow3	Hydraulic separator thermistor

Mark	Name
DCL	Reactor
MC	Motor for Compressor
DFM	DC Fan Motor
MV1	Micro-Computer Control Expansion Valve
NF	Magnet ring for Noise Filter
PSH	High Pressure Switch
PSL	Low Pressure Switch
RVR	Reversing Valve Relay
Tfin	Thermistor for Fin
ELB	Earth Leakage Breaker

WARNING

Do not connect the power source line to the PCB4/PCB7.
The PCB4/PCB7 are for the low voltage or communication line.
If connected, the printed circuit board will be damaged.

WARNING

High voltage danger!
Turn OFF the main power switch to the unit and wait for more than 10 minutes before electrical wiring work or a periodical check is performed.

Note:

1.All the field wiring and equipment must comply with local codes.

Warning Electrical operation and regular inspection are not allowed until 10 minutes after the main power supply is cut off

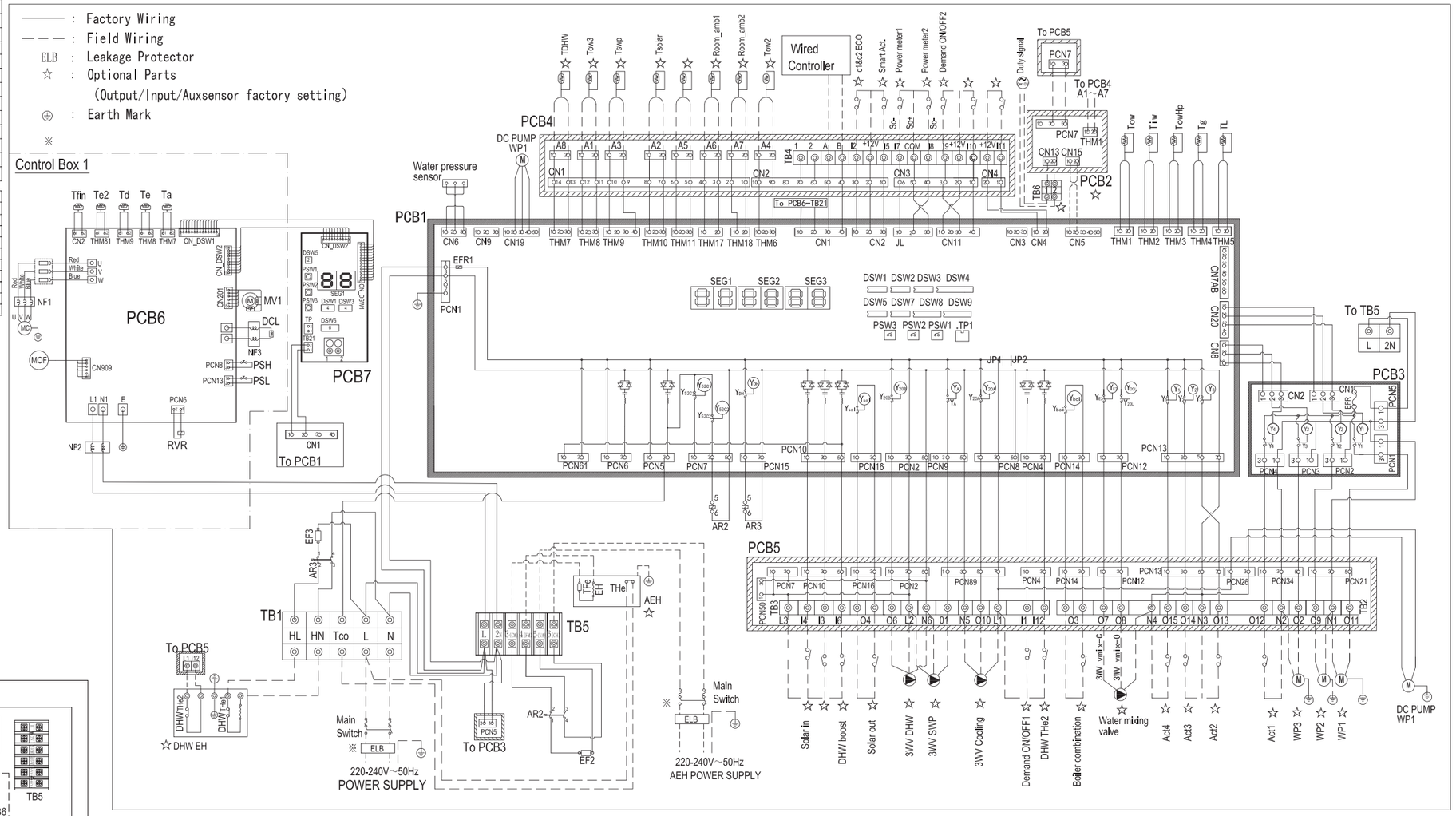

The Layout of Electrical Box 1

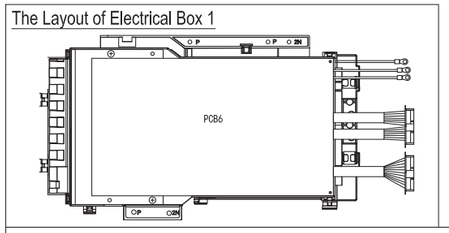

The Layout of Electrical Box 2

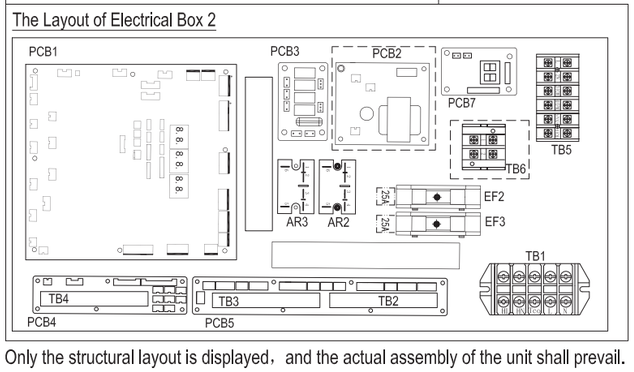

Only the structural layout is displayed，and the actual assembly of the unit shall prevail.

DIP Switch Settings of PCB7(before shipment) ■ Indicates the position of DIP Switch

DSW1(Unit model setting) No setting is required.	DSW3(Capacity Setting) No setting is required.		DSW5(End-Res.)	DSW6(Ref.Cycle No.Setting)
	44 (2.0 HP)	80 (3.0 HP)		
ON / OFF 1 2 3 4	ON / OFF 1 2 3 4	ON / OFF 1 2 3 4	ON / OFF 1 2	ON / OFF 1 2 3 4 5 6 Ref.Cycle No.Setting 0~63

DIP Switch Settings of PCB1 ■ Indicates the position of DIP Switch

(1) DSW1: Unit model setting
No setting is required.

Monobloc
ON 1 2 3 4

(2) DSW2: Unit capacity setting
No setting is required.

44 (2.0 HP)	80 (3.0 HP)
ON 1 2 3 4	ON 1 2 3 4

(3) DSW3: Additional setting

Setting before shipment	ON 1 2 3 4
ON:Cancel 70 alarm(Water pressure abnormality)	ON 1 2 3 4
Anti-freezing settings ON:Whole water cycle does anti-freezing. OFF:Only primary cycle does anti-freezing.	ON 1 2 3 4

(4) DSW4: Additional setting

Setting before shipment	ON 1 2 3 4 5 6 7 8
Water pump forced ON	ON 1 2 3 4 5 6 7 8
Auxiliary electric heater forced OFF	ON 1 2 3 4 5 6 7 8
ON:Anti-freezing enabled OFF:Anti-freezing disabled	ON 1 2 3 4 5 6 7 8
Water pump mode when Thermo OFF ON: Operate constantly OFF:Operate periodically	ON 1 2 3 4 5 6 7 8
Manual emergency setting ON: Manual emergency enabled OFF:Manual emergency disabled	ON 1 2 3 4 5 6 7 8
DHW electric heater allowance setting ON: DHW electric heater cancel forced OFF OFF:DHW electric heater forced OFF	ON 1 2 3 4 5 6 7 8

DHW 3-way valve forced ON	ON 1 2 3 4 5 6 7 8
Start air purge	ON 1 2 3 4 5 6 7 8

(5) DSW5: Additional setting

Setting before shipment	ON 1 2 3 4
ON:Cancel 75/78 alarm(Water pump abnormalities)	ON 1 2 3 4
ON:WP3 operates in space cooling mode.	ON 1 2 3 4

(6) DSW6: Fuse reset

Setting before shipment	ON 1 2

(7) DSW7: Not used

Setting before shipment	ON 1 2 3 4

(8) DSW8: Refrigeration system No. setting
Setting is required.
Use binary encoding method. Before shipment are all OFF.

ON 1 2 3 4 5 6

Max No.63 are available to set when all the equipment are connected to corresponding Central Control System.
EX: Set refrigeration system no. as 8.

ON 1 2 3 4 5 6

(9) DSW9: Indoor unit No. setting
No setting is required.

Setting before shipment	ON 1 2 3 4 5 6

10. Control function

10.1 Basic function introduction

There are four main functions than can set on the master controller interface and incorporate into the heat pump and water circulation.

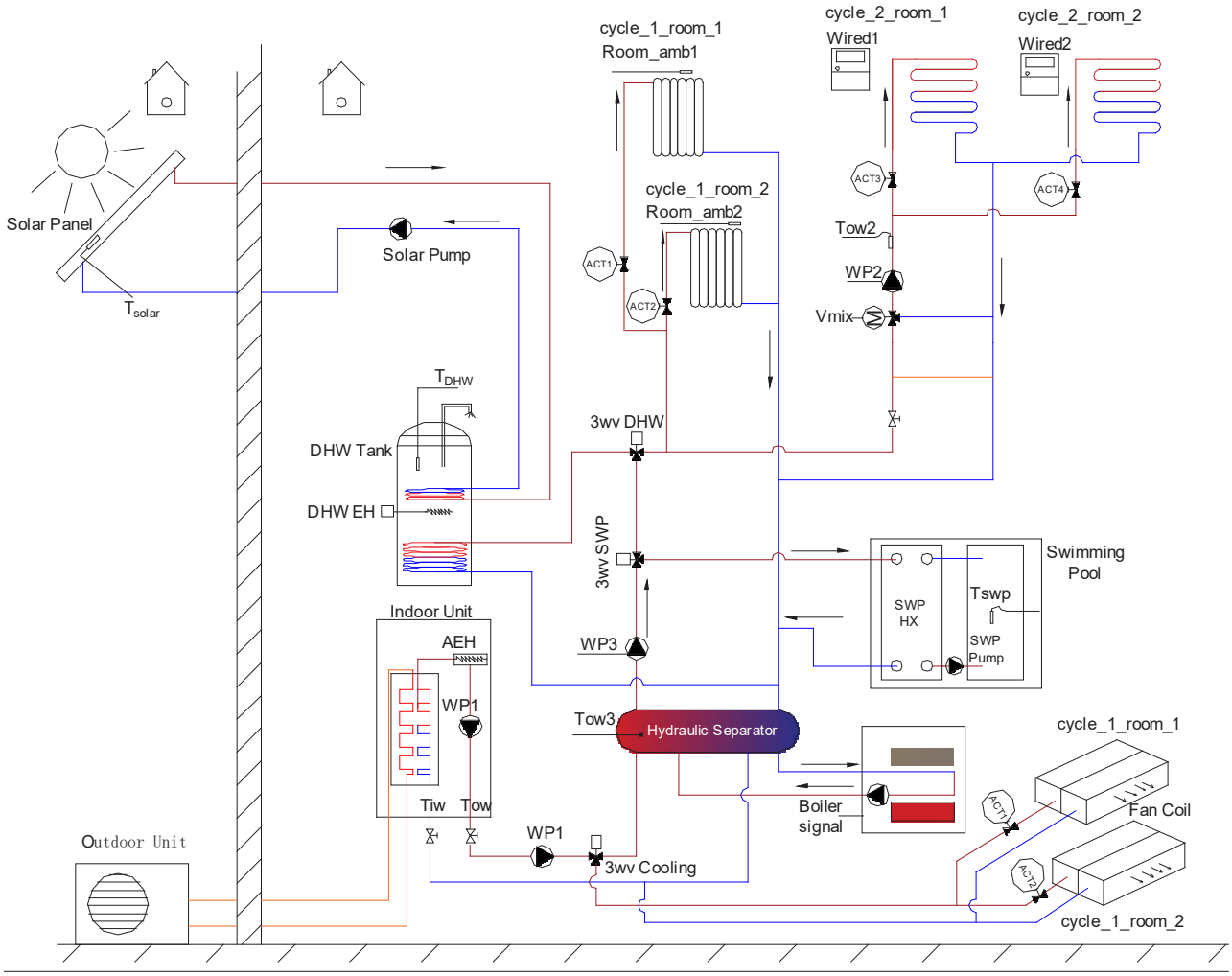

Mark	Description
AEH	Auxiliary electric heater in water circulation
DHW EH	DHW Electric Heater in DHW tank
WP1	Water Pump1 between plate exchanger and hydraulic separator /installation
WP2	Water Pump2 used only on Water Cycle 2
WP3	Water Pump3 from hydraulic separator to the distribution circuit
Vmix	mixing valve to achieve a second temperature control on Water Cycle 2
3WV Cooling	3-way valve for cooling diverting to cooling fan coils
3WV DHW	3-way valve for DHW diverting to the sanitary DHW tank inner coil
3WV SWP	3-way valve for swimming pool diverting to the swimming pool heat exchanger
ACT1- ACT7	room actuator to achieve room temperature control
Cycle_1_room1…4	Room thermostat1…4 set on Water Cycle 1
Cycle_2_room1…4	Room thermostat1…4 set on Water Cycle 2
Room_amb1…7	Room temperature detected by auxiliary sensor
wired1…2	wired room controller1…2
Tiw	Measured inlet water temperature
Tow	Measured outlet water temperature
Tow2	Water Cycle 2 outlet water temperature
Tow3	Hot water temperature detection of hydraulic separator
TDHW	DHW water temperature of DHW tank
Tswp	Measured swimming pool water temperature
Tsolar	Measured Hot water temperature of solar panels

NOTE

Automatic Bypass Valve or equivalent Bypass replacement should be fitted after the pump in water circulation to prevent pump pressure from climbing significantly and ensure adequate flow.

10.1.1 Main function

(1) Space heating and Water Cycle

- Water Cycle 1 and Water Cycle 2

Space heating is operated by Water Cycle 1 or combination of Water Cycle 1 and Water Cycle 2.The unit is connectable to only one cycle demand (Water Cycle 1), either high temperature (i.e., radiator or fan coils) or low temperature (radiant floor).

Water Cycle 1 will be direct (high temperature for radiator or fan coils operation) and Water Cycle 2 will be a mixing cycle in order to have a second temperature control using mixing valve (low temperature for floor heating operation). Additionally, a motorized valve need be added in order to close direct cycle when not in use . The floor heating loops (Cycle 2) require a lower temperature than with radiator or fan coils (Cycle 1). To get these 2 water temperature levels, a mixing station is required. This mixing station is controlled using the indoor unit by means of a mixing valve and additional water sensor.

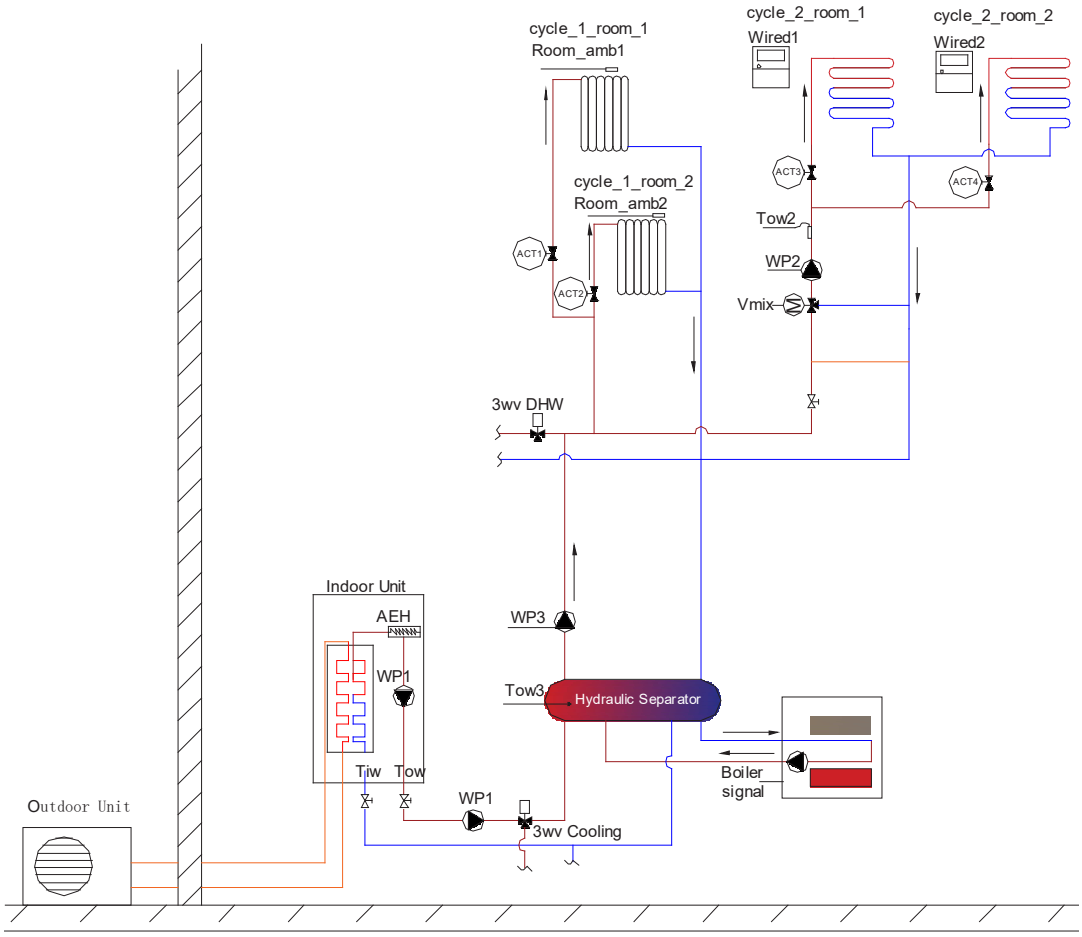

- Room thermostat

There are max. 4 room thermostats that can be incorporated to each Water Cycle (Cycle 1 and Cycle 2). The room thermostats can be Rooms function on Master controller , Slave room controller or Demand ON/OFF1/2 by input signal. And each room thermostat will control Switch ON/OFF and Thermo ON/OFF of each room based on individual operation (ON/OFF / setting temperature / room temperature) and need a actuator to achieve room temperature control.

- Room thermostat & Water Cycle

① If any one of room thermostats on the specific Water Cycle (Cycle 1 or Cycle 2) is Switch ON and Thermo ON, The corresponding Water Cycle will be Switch ON and Thermo ON. Then the heat pump and other heat source will be operated to meet demand.

② If all room thermostats on the specific Water Cycle (Cycle 1 or Cycle 2) is Switch OFF and Thermo OFF, The corresponding Water Cycle will either be Switch OFF / Thermo OFF or not depending on setting .

③ Room thermostats condition (setting temperature and room temperature) on the specific Water Cycle (Cycle 1 or Cycle 2) can offset setting outlet water temperature of the corresponding Water Cycle depending on setting .

④ Water Cycle (Cycle 1 or Cycle 2) can also operate independently without Room thermostats by request of water outlet temperature (the difference of setting outlet water temperature and current water outlet temperature on specific Water Cycle). The corresponding Water Cycle will be Thermo ON when setting outlet water temperature is not met. Then the heat pump and other heat source will be operated to meet demand. Oppositely the corresponding Water Cycle will be Thermo OFF.

⑤ Water Cycle (Cycle 1 or Cycle 2) can also operate by combination of request of water outlet temperature and Room thermostats, that means the corresponding Water Cycle will be Switch ON and Thermo ON by request of water outlet temperature or Room thermostats on the corresponding Water Cycle. Oppositely the Water Cycle will be Thermo OFF when request of water outlet temperature and Room thermostats Thermo ON all disappear.

(2) Space cooling and Water Cycle

- Water Cycle 1 and Water Cycle 2

Space cooling is also operated by the same Water Cycle 1 or combination of Water Cycle 1 and Water Cycle 2. The unit is connectable to only one cycle demand (Cycle 1).

The unit is also able to connect to 2 different Water Cycles (Cycle 1 and Cycle 2), Water Cycle 1 will be direct to the cooling water outlet and Water Cycle 2 will be a mixing cycle in order to have a second temperature control using mixing valve (different cooling water outlet temperature). Additionally, a motorized valve can be added in order to close direct cycle when not in use. To get these 2 water temperature levels, a mixing station is required. This mixing station is controlled using the indoor unit by means of a mixing valve and additional water sensor.

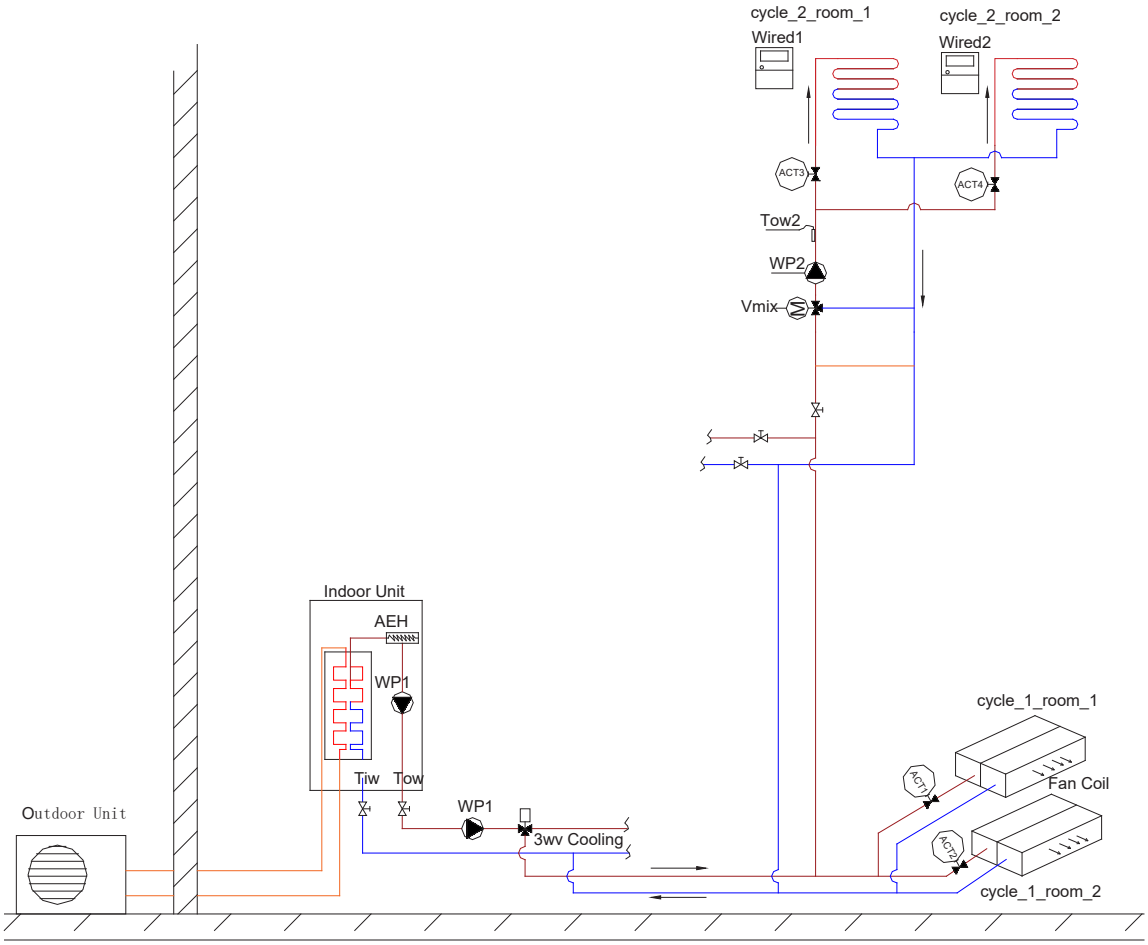

NOTE:

Shut-off valve can be fitted to separate cooling water circulation and heat water circulation (DHW operation) if Space cooling and DHW is possible to operate simultaneously referring to 10.1.2.

- Room thermostat

There are max. 4 room thermostats that can be incorporated to each Water Cycle (Cycle 1 and Cycle 2). The room thermostats can be Rooms function on master controller, Slave room controller or Demand ON/OFF1/2 by input signal. And each room thermostat will control Switch ON/OFF and Thermo ON/OFF of each room based on individual operation (ON/OFF / setting temperature / room temperature) and each room need an actuator to achieve room temperature control.

- Room thermostat & Water Cycle

① If any one of room thermostats on the specific Water Cycle (Cycle 1 or Cycle 2) is Switch ON and Thermo ON, The corresponding Water Cycle will be Switch ON and Thermo ON. Then the heat pump will be operated to meet demand.

② If all room thermostats on the specific Water Cycle (Cycle 1 or Cycle 2) is Switch OFF and Thermo OFF, The corresponding Water Cycle will either be Switch OFF / Thermo OFF or not depending on setting .

③ Room thermostats condition (setting temperature and Room temperature) on the specific WaterCycle (Cycle 1 or Cycle 2) can offset setting outlet water temperature of the corresponding Water Cycle. depending on setting.

④ Water Cycle (Cycle 1 or Cycle 2) can also operate independently without Room thermostats by request of water outlet temperature (the difference of setting outlet water temperature and current water outlet temperature on specific Water Cycle) . The corresponding Water Cycle will be Thermo ON when setting outlet water temperature is not met. Then the heat pump will be operated to meet demand. Oppositely the corresponding Water Cycle will be Thermo OFF.

⑤ Water Cycle (Cycle 1 or Cycle 2) can also operate by combination of request of water outlet temperature and Room thermostats, that means the corresponding Water Cycle will be Switch ON and Thermo ON by request of water outlet temperature or Room thermostats on the corresponding Water Cycle. Oppositely the Water Cycle will be Thermo OFF when request of water outlet temperature and Room thermostats Thermo ON all disappear.

(3) Domestic Hot Water (DHW)

In addition, the unit can be combined with sanitary tank to delivery DHW. When DHW operation is required, the 3-way valve for DHW changes its normal position diverting to the sanitary tank inner coil, allowing to heat the tank water temperature. DHW can be heated up by heat pump / DHW Electric Heater / boiler / solar panel depending on heat source availability and setting.

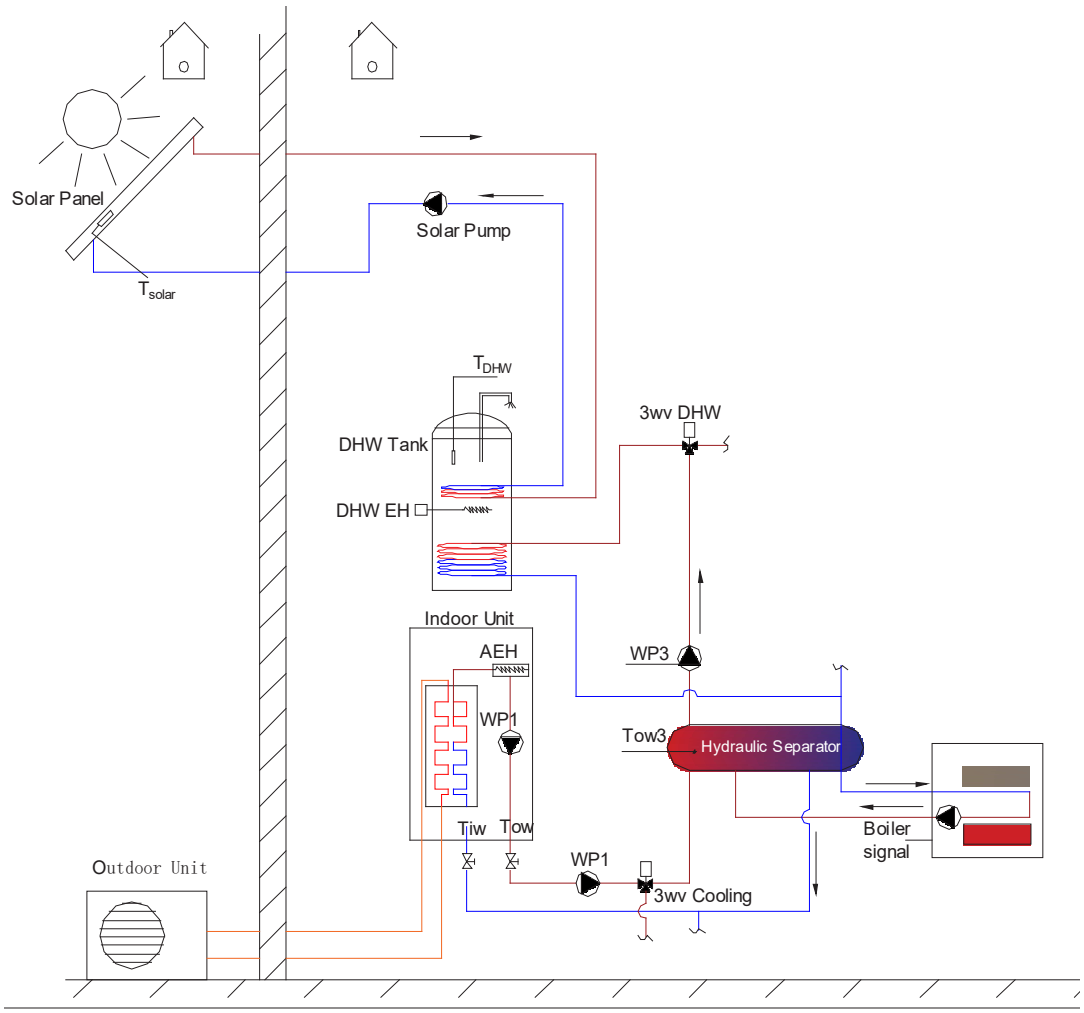

(4) Swimming pool (SWP)

In addition, the unit can be combined with swimming pool. When the swimming pool operation is required, the 3-way valve for the swimming pool changes its normal position diverting to the swimming pool heat exchanger, allowing to heat the swimming pool water to a comfortable value. Swimming pool can be heated up by heat pump / Auxiliary electric heater / boiler depending on heat source availability and setting.

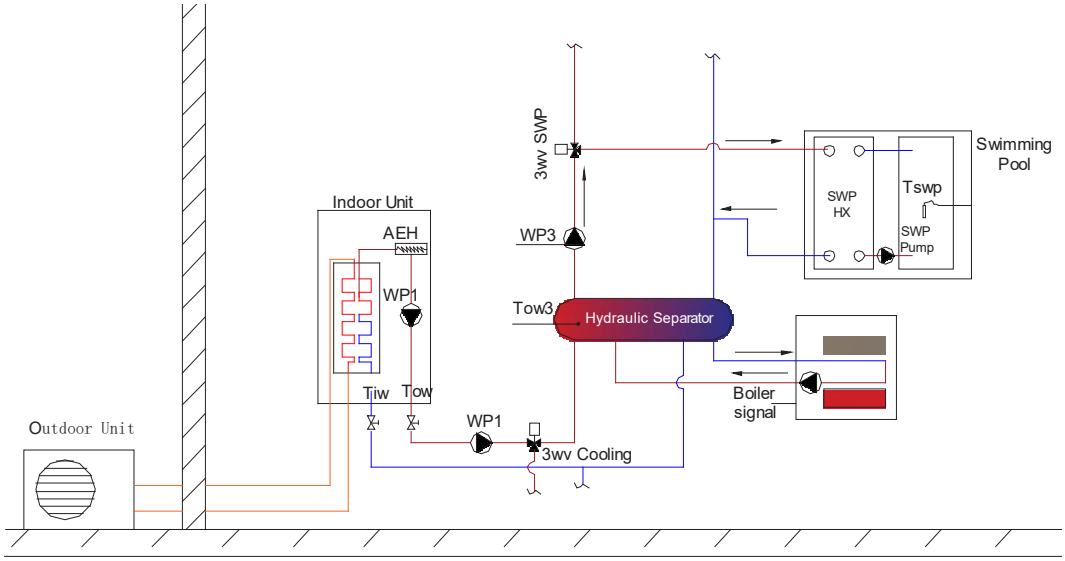

10.1.2 Alternate function operation with priority

The heat pump system can be configured with various combinations of the four main functions. For example, space heating/cooling and DHW is configured as available function. And different function of space heating/cooling/DHW/SWP and their combinations can be switched on altogether through master controller interface. Usually heat pump can only operate one function at the same time. So, all the available function will operate alternately with different priority depending on setting. When specific function operates the corresponding 3-way valve will divert to specific water circuit. For example, when DHW operation is required, the 3-way valve for DHW changes its normal position diverting to the sanitary tank inner coil, allowing to heat the tank water.

10.1.2.1 3WVs operation

3WVs are used to switch to specific function operation.
3WVs operation as following.

Operation mode	3WV DHW	3WV Cooling	3WV SWP
Defrost by DHW *1	ON	OFF	OFF
Defrost by Space heating *2	OFF	OFF	OFF
Air purge *3	On and OFF periodically		
Seizure protection *4	On and OFF periodically		
Space heating operation	OFF	OFF	OFF
Space cooling operation	OFF	ON	OFF
DHW operation	ON	OFF	OFF
SWP operation	OFF	OFF	ON
“Space cooling operation and DHW operation simultaneously *5”	ON	ON	OFF
“Space cooling operation and SWP operation simultaneously *6”	OFF	ON	ON

NOTE:

*1. refer to 10.9.2.

*2. refer to 10.9.2.

*3. refer to 10.8.5.

*4. refer to 10.8.6.

*5.It is possible to operate Space cooling (heat pump and water pump1) and DHW (water pump3 or boiler) simultaneously when hydraulic separator is available (refer to 10.2.5) and [DSW5-2] set as [OFF], in this situation cooling water circulation will not pass through hydraulic separator.

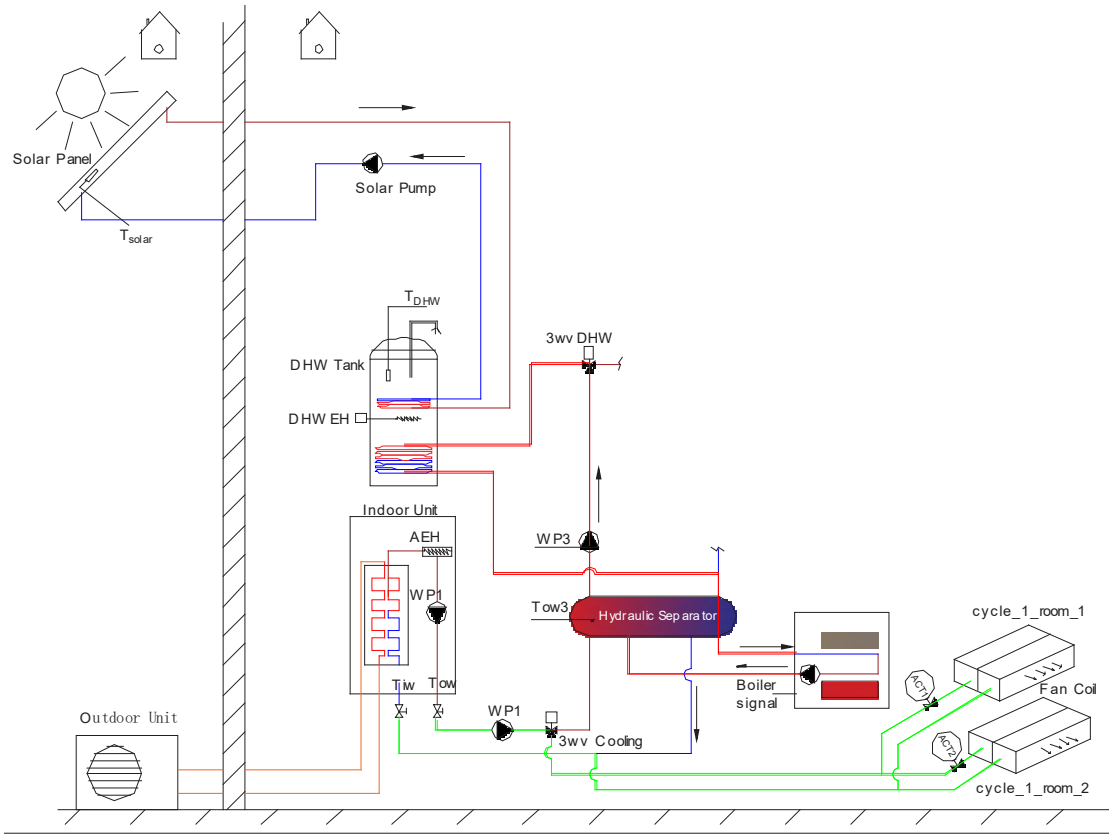

*6. It is possible to operate the 3-way valve for the swimming pool to separate cooling water circulation and heating water circulation when hydraulic separator is available (refer to 10.2.5), the 3-way valve for DHW is unavailable, and [DSW5-2] set as [OFF], in this situation cooling water circulation will not pass through hydraulic separator.

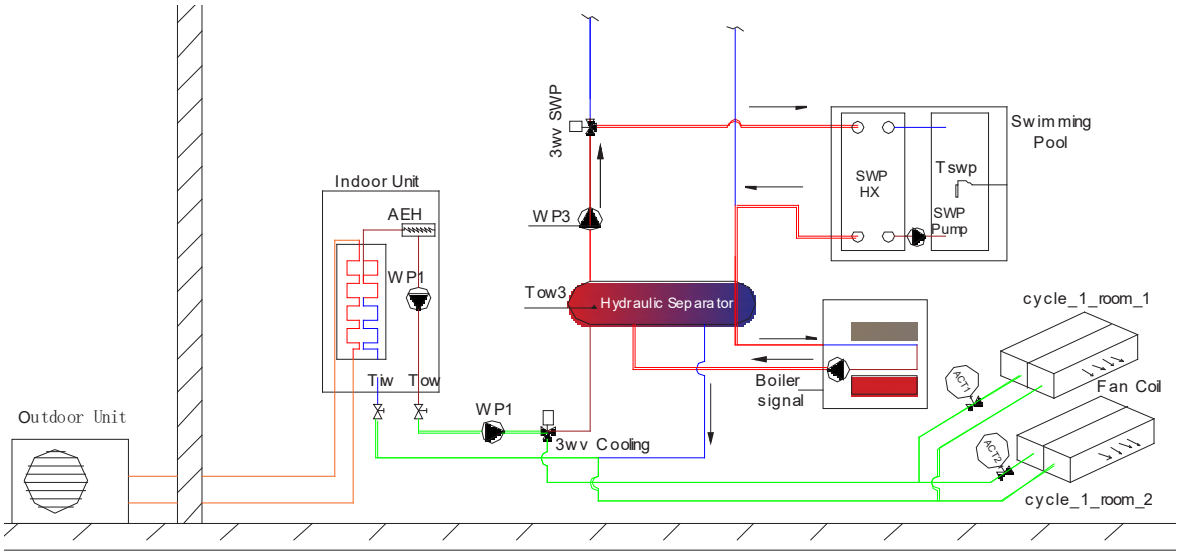

10.1.2.2 Operation priority

All the available function will operate alternately with different priority depending on setting. Usually heat pump can operate alternately between 2 functions.

10.1.2.1.1 Alternate operation between DHW and Space heating/cooling

DHW priority can be set through different ways.

(1) DHW schedule priority

Heat pump will have priority to heat up DHW at [Starting Time 1/2/3/4] with [Setting temperature ON Starting Time 1/2/3/4] of DHW.

To valid the function of DHW schedule priority set [Status] as [Enabled].

The configuration of this option should be done through the master controller.

Configuration →Auxiliary Function →DHW- Schedule Priority.

Mark	Description	Default Value	Range	Steps	Units
	Status	Disabled	Disabled/Enabled	-	-
	Starting Time 1	3:00	Disabled-0:00~24:00	0:10	Time
TDHWS_time1	Setting temperature ON Starting Time 1	50	40-A	1	°C
	Starting Time 2	12:00	Disabled-0:00~24:00	0:10	Time
TDHWS_time2	Setting temperature ON Starting Time 2	50	40-A		°C
	Starting Time 3	16:00	Disabled-0:00~24:00	0:10	Time
TDHWS_time3	Setting temperature ON Starting Time 3	50	40-A		°C
	Starting Time 4	20:00	Disabled-0:00~24:00	0:10	Time
TDHWS_time4	Setting temperature ON Starting Time 4	50	40-A		°C

Note:

1.When DHW Electric Heater is available ([DHW_hts] set as [Enabled] , refer to 10.3.3), A=75°C.

2. When Boiler is available and DHW by Boiler is enabled ([HS] set as [HP+Heater+Boiler] or [HP+Heater+Boiler] and[DHW_B] set as [Enabled] , refer to 10.6.3), A=60°C.

3.circumstance except 1 and 2, A=55°C.

(2) Time priority

- Set max. DHW operation time with heat pump as [HP ON Max. Time] to limit the max. period time of DHW operation shift.

1. Max. DHW operation time of [HP ON Max. Time] will be add extra 70 minutes to heat up DHW in one period time of DHW operation shift When DHW schedule priority is activated at specific setting Starting Time, DHW boost is activated (referring to 10.3.6), or DHW Anti-legionella is activated (referring to 10.3.5).

The configuration of this option should be done through the master controller.

Configuration →DHW

Mark	Description	Default Value	Range	Steps	Units
DHW_HP_tmax	HP ON Max. Time	60	20~250~unlimited	1	min

- Set Min. space heating/cooling operation time with heat pump as [Min. time Space heating/cooling] to ensure adequate space heating/cooling operation time in one period time of space heating/cooling operation shift.

Note:

1.Min. space heating/cooling operation time of [Space_HP_tmin] will be limited to 20 minutes to accelerate shift of DHW operation When DHW schedule priority is activated at specific setting Starting Time, DHW boost is activated (referring to 10.3.6) , or DHW Anti-legionella is activated (referring to 10.3.5).

The configuration of this option should be done through the master controller.

Configuration →Heat Pump→ Heat Pump Priority

Mark	Description	Default Value	Range	Steps	Units
Space_HP_tmin	Min. time Space heating/cooling	60	20-240	1	min

(3) DHW set temperature priority

Set Hysteresis between DHW set temperature and DHW temperature as [DHW Setting Temperature Differential Temp] to start DHW operation shift.

Note:

1.Hysteresis between DHW set temperature and DHW temperature as [DHW_shift_diff] will be limited to accelerateshift of DHW operation When DHW schedule priority is activated at specific setting Starting Time, DHW boost is activated (referring to 10.3.6) , or DHW Anti-legionella is activated (referring to 10.3.5).

The configuration of this option should be done through the master controller.

Configuration →Heat Pump→ Heat Pump Priority

Mark	Description	Default Value	Range	Steps	Units
DHW_shift_diff	DHW Setting Temperature Differential Temp	10	6-20	1	°C

Alternate operation between Space heating/cooling and DHW.

- Meet all following conditions to start DHW operation shift (DHW Switch ON).

(1) TDHW ≤ TDHWS - DHWS_shift_diff

(2) Period time of space heating/cooling operation shift is more than [Space_HP_tmin] or space heating/cooling has no demand.

- Meet one of following conditions to start space heating/cooling operation shift (space heating/coolingSwitch ON).

(1) TDHW is met.

(2) Max temperature of THPSTOP is reached. (THPSTOP refers to 10.3.4).

(3) Period time of DHW operation shift is more than [DHW_HP_tmax].

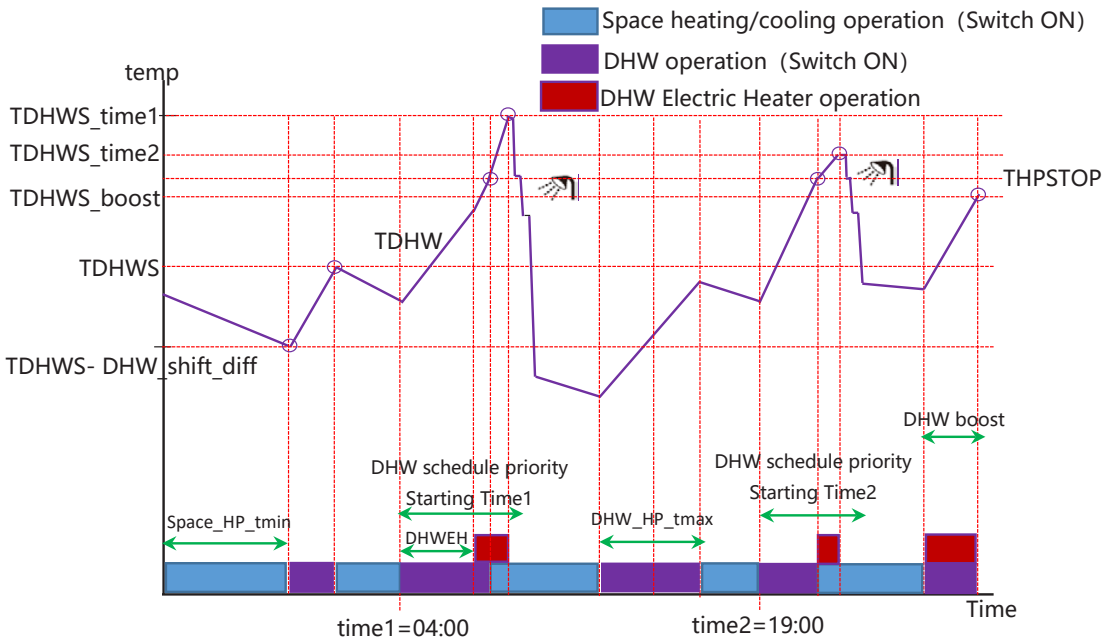

Note:

1. [DHWEH] refers to 10.3.4 and DHW boost refers to 10.3.6.
2. Heat pump will keep cooling operation without shifting to DHW operation when Average outdoor ambient temperature is more than 38°C - 40°C, that is out of heat pump heating operation range. DHW is met by DHW Electrical Heater (referring to 10.3.4 (4)) or boiler (10.6.3 (7)), and keep complementary heat source is available at that time.

10.1.2.1.2 Alternate operation between SWP and Space heating/cooling

- Meet all following conditions to start SWP operation shift (SWP Switch ON).

(1) Tswp ≤ Tswps-1 [°C] or demand request by Optional input signal of [Swimming pool Demand ON/OFF] (refer to 10.4.2).

(2) Period time of space heating/cooling operation shift is more than 60 minutes or space heating/cooling has no demand.

- Meet one of following conditions to start space heating/cooling operation shift (space heating/cooling Switch ON).

(1) Tswp is met or demand request disappears by Optional input signal of [Swimming pool Demand ON/OFF] (refer to 10.4.2).

(2) Period time of SWP operation shift is more than120 minutes.

10.1.2.1.3 Alternate operation between SWP and DHW

- Meet all following conditions to start SWP operation shift (SWP Switch ON).

(1) Tswp ≤ Tswps-1 [°C] or demand request by Optional input signal of [Swimming pool Demand ON/OFF] (refer to 10.4.2).

(2) Period time of DHW operation shift is more than 60 minutes or DHW has no demand.

- Meet one of following conditions to start DHW operation shift (DHW Switch ON).

(1) Tswp is met or demand request disappears by Optional input signal of [Swimming pool Demand ON/OFF] (refer to 10.4.2).

(2) Period time of SWP operation shift is more than120 minutes.

10.1.2.1.4 Alternate operation between SWP / DHW / Space heating/cooling

All the available function will operate alternately with different priority depending on setting. Usually heat pump can operate alternately between 2 functions. Operation can refer to followings when the three functions all switch on.

(1) When demand of one function is met , Heat pump can operate alternately between the other 2 functions according to 10.1.2.1.1 /10.1.2.1.2 /10.1.2.1.3. For example, Heat pump can operate alternately between DHW and space cooling according to 10.1.2.1.1 when setting SWP temperature [Tswp] is met.

(2) When demand of SWP / DHW / Space heating/cooling are all requested. The heat pump can operate alternately between the first one of 2 functions according to 10.1.2.1.2, and then the Heat pump can operate alternately between the second one of 2 functions according to 10.1.2.1.3.

Note:

1. It is not recommended to switch on all the three functions of SWP / DHW / Space heating/cooling at the same time.
2. When one function is urgent to use, it is recommended to switch off the other functions to focus the capacity of the heat pump.

10.1.3 Heat source

Basically, Heat pump produces capacity for space heating / space cooling / domestic hot water / swimming pool by transforming renewable energy from the outside air into heat. Air to water heat pumps extract the free energy present in the air, which is efficient to heat a home up to a comfortable temperature.

10.1.3.1 Available heat source

Besides heat pump several other complementary heat sources can be incorporated in the heat pump system to offer complementary heat to extend the application.

(1) Auxiliary electric heater
It can be used as complementary heat source for space heating and swimming pool.

(2) DHW electric heater
It can be used as complementary heat source for DHW.

(3) solar panel
It can be used as complementary heat source for DHW.

(4) gas boiler
It can be used as complementary heat source for space heating / DHW / swimming pool.

The decision as to how to operate complementary heat sources is based on ambient temperature and heat source selection as below.

The configuration of this option should be done through the master controller.

Configuration →Complementary Heating →Heating Source

Mark	Description	Default Value	Range	Steps	Units
HS	Heating Source	Only HP	HP only / HP + Heater / HP + Boiler / HP + Heater + Boiler	-	-

Refer to 10.5 and 10.6 for details.

10.1.3.2 Emergency operation

In the event of outdoor unit failure, the required heating can be provided by complementary heat sources such as Auxiliary electric heater/ DHW electric heater / boiler / solar panel / gas boiler. The unit can operate to offer heating capacity intentionally as emergency operation for space heating / DHW / SWP without outdoor unit function.

The configuration of this option should be done through the master controller.

Configuration →Auxiliary Function →Emergency Operation

Mark	Description	Default Value	Range	Steps	Units
Emergency_Mode	Emergency Operation Mode	Manual	Manual/Automatic	-	-
Emergency_SH	Emergency Space heating Status	Disabled	Disabled/Enabled	-	-
Emergency_DHW	Emergency DHW Status	Disabled	Disabled/Enabled		
Emergency_SWP	Emergency Swimming pool Status	Disabled	Disabled/Enabled		

(1) [Emergency Operation Mode]

- Manual mode: Emergency operation is performed by dip-switch setting.

  DSW4-4: ON –> Emergency Operation enabled

  DSW4-4: OFF –> Emergency Operation disabled

- Automatic mode: Emergency operation is performed when alarm occurs in the outdoor unit or indoor unit that is forbidding outdoor unit from function.

NOTE:

Alarm code will display on the status bar of master controller interface when alarm occurs. Do not reset alarm code that will make Automatic Emergency operation disabled.

(2) [Emergency Space heating Status]: Enable or disable emergency operation for space heating.

(3) [Emergency DHW Status]: Enable or disable emergency operation for DHW.

(4) [Emergency Swimming pool Status]: Enable or disable emergency operation for SWP.

10.2 Space heating/cooling

Space heating is operated by Water Cycle 1 or combination of Water Cycle 1 and Water Cycle 2. Space heating is demanded by request of water outlet temperature and Room thermostats on Water Cycle 1 / Water Cycle 2.

10.2.1 Room thermostat

There are max. 4 room thermostats that can be incorporated to each Water Cycle (Cycle 1 and Cycle 2). The room thermostats can be Rooms function on Master controller, room controller or Demand ON/OFF1/2 by input signal. And each room thermostat will control Switch ON/OFF and Thermo ON/OFF of each room based on individual operation (ON/OFF / setting temperature / room temperature) and need an actuator to achieve room temperature control.

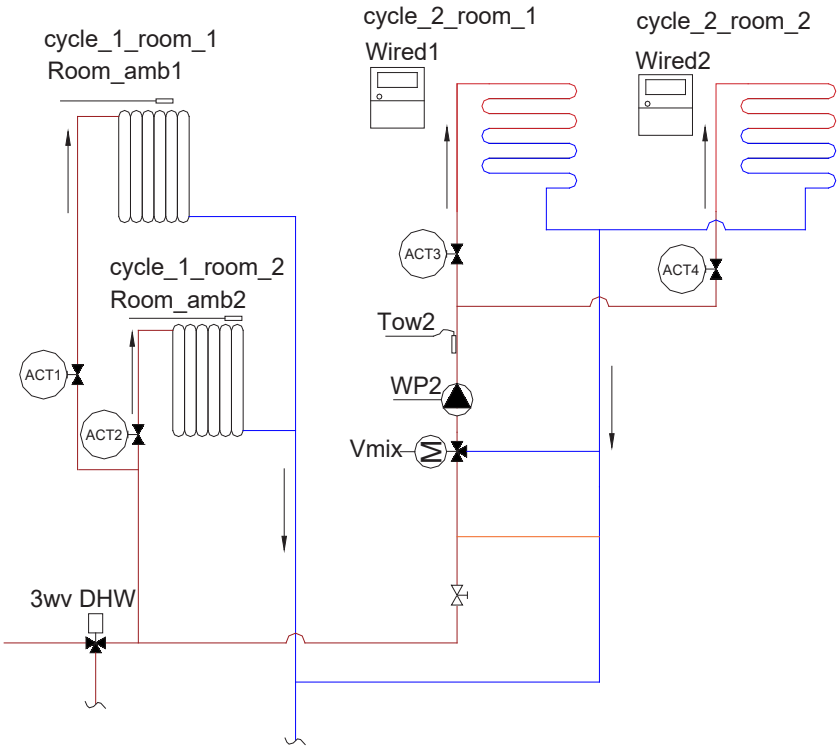

The configuration of this option should be done through the master controller

Configuration →Room thermostat→Cycle1.

Configuration →Room thermostat→Cycle2.

Mark	Cycle_1_room_i Cycle_2_room_i	Room thermostat & temp.		Room actuator		
		selection	Range	selection	Range	
	Cycle_1_room_i Cycle_2_room_i i=1,2,3,4(depend on configured room number on specific Water Cycle)		NONE Room_amb1 *1 Room_amb2 *1 Room_amb3 *1 Room_amb4 *1 Room_amb5 *1 Room_amb6 *1 Room_amb7 *1 Slave_Wired1.Sensor *2 Slave_Wired2.Sensor *2 Demand ON/OFF1 *3 Demand ON/OFF2 *3		NONE Act1 *4 Act2 *4 Act3 *4 Act4 *4 Act5 *4 Act6 *4 Act7 *4	-

NOTE:

*1. Rooms function on Master controller is selected as room thermostat. And in this scenario auxiliary sensor on PCB1 of indoor unit can be configured as function of [Room_amb1...7] and be selected as Room temperature detection. Refer to 10.10.3.

*2. Slave_Wired1 room controller can be selected as room thermostat and Room temperature detection.

*3. Optional input signal can be configured as function of [Demand ON/OFF1...2] and selected as room thermostat.

4. Optional Output signal can be configured as function of [Act1...7] and be selected as Room actuator. refer to10.10.

10.2.1.1 Room Thermo ON/OFF

Room Thermo ON/OFF is different depending on Room thermostat.

(1) Room Thermo ON/OFF by setting room temperature and Room temperature detection

- Heating

-Thermo ON

Tr_ Room ≤ Ts_ Room°C

-Thermo OFF

Tr_Room ≥ Ts_Room+2

- Cooling

-Thermo ON

Tr_Room ≥ Ts_Room+2°C

-Thermo OFF

Tr_Room < Ts_Room

Tr_ Room: detected room temperature.

Ts_Room: setting room temperature.

(2) Room Thermo ON/OFF by Demand ON/OFF1/2

- Heating and cooling

-Thermo ON

When a closed signal is active

-Thermo OFF

When an Open signal is active

Refer to 10.10.1.

10.2.1.2 ECO operation

- Cooling

Ts_Room is limited above 26°C when ECO operation is active.

- Heating

Ts_Room is limited below 22°C when ECO operation is active.

ECO operation refers to manual of controller.

10.2.2 Water Cycle for space heating

Space heating is operated by Water Cycle 1 or combination of Water Cycle 1 and Water Cycle 2.

Cycle 1 will be direct (high temperature for radiator or fan coils operation) and Cycle 2 will be a mixing cycle in order to have a second temperature control using mixing valve (low temperature for floor heating operation). Additionally, a motorized valve can be added in order to close direct cycle when not in use . The floor heating loops (Cycle 2) require a lower temperature than with radiator or fan coils (Cycle 1). To get these 2 water temperature levels, a mixing station is required. This mixing station is controlled using the indoor unit by means of a mixing valve / additional pump (WP2) /additional water sensor (Tow2).

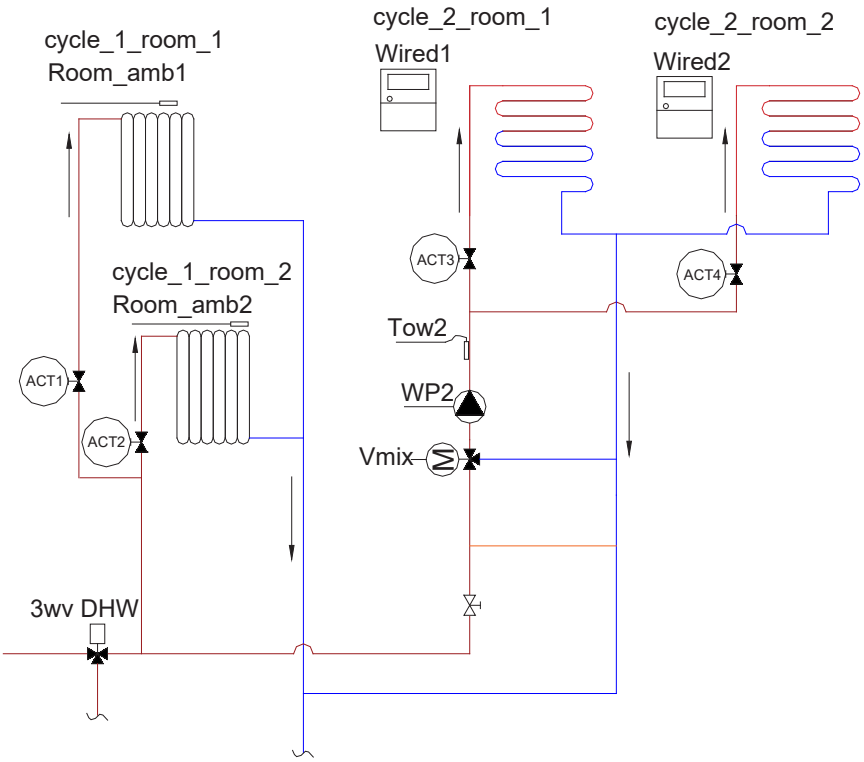

NOTE:

① When Cycle 2 is available Auxiliary sensor on PCB1 of indoor unit need be configured as function of [Tow2] . Refer to 10.10.3.

② When Cycle 2 is available Optional Output signal need be configured as function of [WP2]. This Output signal can be used as relay signal to wp2. Refer to10.10.2.

The configuration of Water Cycle 1 and Water Cycle 2 availability should be done through the master controller

Configuration → Space heating →Cycle 1

Mark	Description	Default Value	Range	Steps	Units
Cycle 1_ Status	Status	Enabled	Disabled /Enabled	-	-

Configuration → Space heating →Cycle 2

Mark	Description	Default Value	Range	Steps	Units
Cycle 2_ Status	Status	Disabled	Disabled /Enabled	-	-

10.2.2.1 Set target outlet water temperature

Each of the 2 Water Cycles will have an independent target outlet water temperature. And Target outlet water temperature is combination of Water Cycle set-point and compensation of Water ECO offset / Room thermostat.

(1) Heating Water Cycle set-point can be define as follows:

Ttwo_c1 _water_p as Water Cycle 1.
Ttwo_c2 _water_p as Water Cycle 2.

There are three ways to set Water Cycle set-point as follows:

- Fixed, refer to 1.2.2.1.1 (1)
- OTC point, refer to 1.2.2.1.1 (2)
- OTC Gradient, refer to 1.2.2.1.1 (3)

(2) Heating Compensation of Water ECO offset defined as following, refer to 1.2.2.1.2

c1_wate_h_Ecoofs as Water Cycle 1.
c2_wate_h_Ecoofs as Water Cycle 2.

NOTE: Compensation of Water ECO offset is valid when the function is active.

(3) Heating Compensation of Room thermostat defined as following, refer to 1.2.2.1.3

Compenh_c1 as Water Cycle 1.
Compenh_c2 as Water Cycle 2.

NOTE: Compensation of Room thermostat is valid when the function is active.

(4) Heating Target outlet water temperature defined as

Ttwo_Cycle 1 as Water Cycle 1.
Ttwo_Cycle 2 as Water Cycle 2.

Heating Target outlet water temperature is combination of Water Cycle set-point and compensation of Water ECO offset / Room thermostat.

Ttwo_Cycle 1= Ttwo_c1 _water_p + Compenh_c1 - c1_wate_h_Ecoofs
Ttwo_Cycle 2= Ttwo_c2 _water_p + Compenh_c2 – c2_wate_h_Ecoofs

NOTE: Compenh_c1 and Compenh_c2 is forced as 0 when water Calculation Regulation Mode set as [Fix].

(5) Heating Target outlet water temperature is regulated as following scope

c1_wate_h_min ≤ Ttwo_Cycle 1 ≤ c1_wate_h_max
c2_wate_h_min ≤ Ttwo_Cycle 2 ≤ c2_wate_h_max

The configuration of this option should be done through the master controller

Configuration → Space heating →Cycle 1→ Working range

Mark	Description	Default Value	Range	Steps	Units
c1_wate_h_max	Max. Water Supply Temp	55	35~60	1	°C
c1_wate_h_min	Min. water Supply Temp	20	20~34	1	°C

Configuration → Space heating →Cycle 1

Mark	Description	Default Value	Range	Steps	Units
c1_wate_t	type of heat emitters	radiator	Radiators/Floor Heating/Fan coils		

Configuration → Space heating →Cycle 2→ Working range

Mark	Description	Default Value	Range	Steps	Units
c2_wate_h_max	Max. Water Supply Temp	50	35~55	1	°C
c2_wate_h_min	Min. water Supply Temp	20	20~34	1	°C

Configuration → Space heating →Cycle 2

Mark	Description	Default Value	Range	Steps	Units
c2_wate_t	type of heat emitters	Underfloor heating	Radiators/Floor Heating/Fan coils		

NOTE:

1. It is the installer's responsibility to make sure no unwanted situation occurs (for example: water temperature setting too high into floor heating).
2. When only Cycle 1 is heating, Cycle 2 will be fed with water at temperature equal to the target water of Cycle 1.
3. Water Cycle 2 is matched with low water temperature application et. Floor heating with low Target outlet water temperature and Water Cycle 1 is matched with high water temperature application et. radiator with high Target outlet water temperature.

10.2.2.1.1 Water temperature set-point

Water Cycle set-point can be set as follows:

The configuration of this option should be done through the master controller

Configuration → Space heating →Cycle 1

Mark	Description	Default Value	Range	Steps	Units
Cycle 1	Water Regulation Mode	Fixed	Fixed OTC point OTC Gradient	-	-

Configuration → Space heating →Cycle 2

Mark	Description	Default Value	Range	Steps	Units
Cycle 2	Water Regulation Mode	Fixed	Fixed OTC point OTC Gradient	-	-

(1) Fixed

Setting outlet water temperature is a fixed temperature set by the user on master controller. Refer to master controller manual.

The configuration of this option should be done through the master controller

Main Interface → Space heating →Cycle 1

Mark	Description	Default Value	Range	Steps	Units
Ttwo_c1 _water_p	Cycle 1 water temperature set-point	40	c1_wate_h_min ~ c1_wate_h_max	1	°C

Main Interface → Space heating →Cycle 2

Mark	Description	Default Value	Range	Steps	Units
Ttwo_c2 _water_p	Cycle 2 water temperature set-point	40	c1_wate_h_min ~ c1_wate_h_max	1	°C

(2) OTC point

Water target is selected by an Outside Temperature Compensated (OTC) control that is defined by 4 different points to create a line representing the function that the air to water heat pump will use to give the temperature setting according to the current ambient temperature. OTC Points system will use average outdoor ambient temperature in order to get the water temperature set-point. Water set-point will be determined using the following rule:

① Water temperature set point of Water Cycle 1: Ttwo_c1 _water_p as following

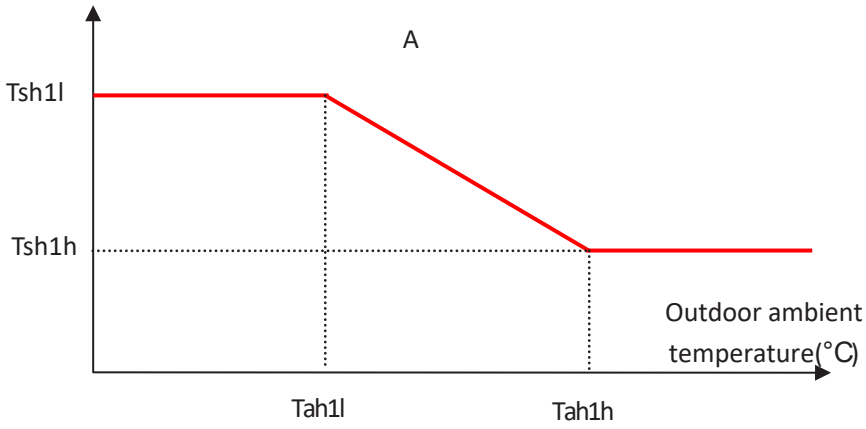

The configuration of this option should be done through the master controller

Configuration → Space heating → Cycle 1→ Water Regulation Mode→ OTC point

Mark	Description	Default Value	Range	Steps	Units
Tah1l	low ambient temperature	-20	-20~5	1	°C
Tah1h	High ambient temperature	20	6~25	1	°C
Tsh1l	Water temperature at low ambient temperature	44*	35~c1_wate_h_max	1	°C
Tsh1h	Water temperature at high ambient temperature	25*	c1_wate_h_min~34	1	°C

② Water temperature set point of Water Cycle 2: Ttwo_c2 _water_p as following

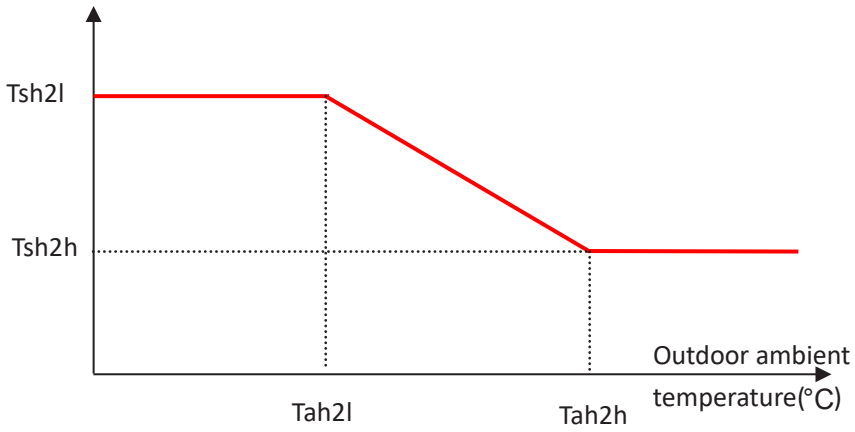

The configuration of this option should be done through the master controller

Configuration → Space heating → Cycle 2→ Water Regulation Mode→ OTC point

Mark	Description	Default Value	Range	Steps	Units
Tah2l	low ambient temperature	-20	-20~5	1	°C
Tah2h	High ambient temperature	20	6~25	1	°C
Tsh2l	Water temperature at low ambient temperature	44*	35~c2_wate_h_max	1	°C
Tsh2h	Water temperature at high ambient temperature	25*	c2_wate_h_min~34	1	°C

NOTE:

Average Outdoor Ambient Temperature (2 hours) is used to calculate set-point.

(3) OTC Gradient

Water target is selected by an Outside Temperature compensated (OTC) control that is defined by a different gradient of the curve. The initial point of the curve is always 20ºC-20ºC (water outlet target 20ºC at outdoor ambient temperature of 20ºC). User can edit the gradient variable.

The gradient of the heating curve describes the relation between the change in water outlet target and the change in outside temperature.

① Water temperature set point of Water Cycle 1: Ttwo_c1 _water_p as following

② Water temperature set point of Water Cycle 2: Ttwo_c2 _water_p as following

Gradient Curve	Ttwo_c1 _water_p Ttwo_c2 _water_p
0.2	-0.2×Ta+24
0.3	-0.3×Ta+26
0.4	-0.4×Ta+28
0.5	-0.5×Ta+30
0.6	-0.6×Ta+32
0.7	-0.7×Ta+34
0.8	-0.8×Ta+36
0.9	-0.9×Ta+38
1	-1.0×Ta+40
1.1	-1.1×Ta+42
1.2	-1.2×Ta+44
1.3	-1.3×Ta+46
1.4	-1.4×Ta+48
1.5	-1.5×Ta+50
1.6	-1.6×Ta+52
1.7	-1.7×Ta+54
1.8	-1.8×Ta+56
1.9	-1.9×Ta+58
2	-2.0×Ta+60
2.1	-2.1×Ta+62
2.2	-2.2×Ta+64

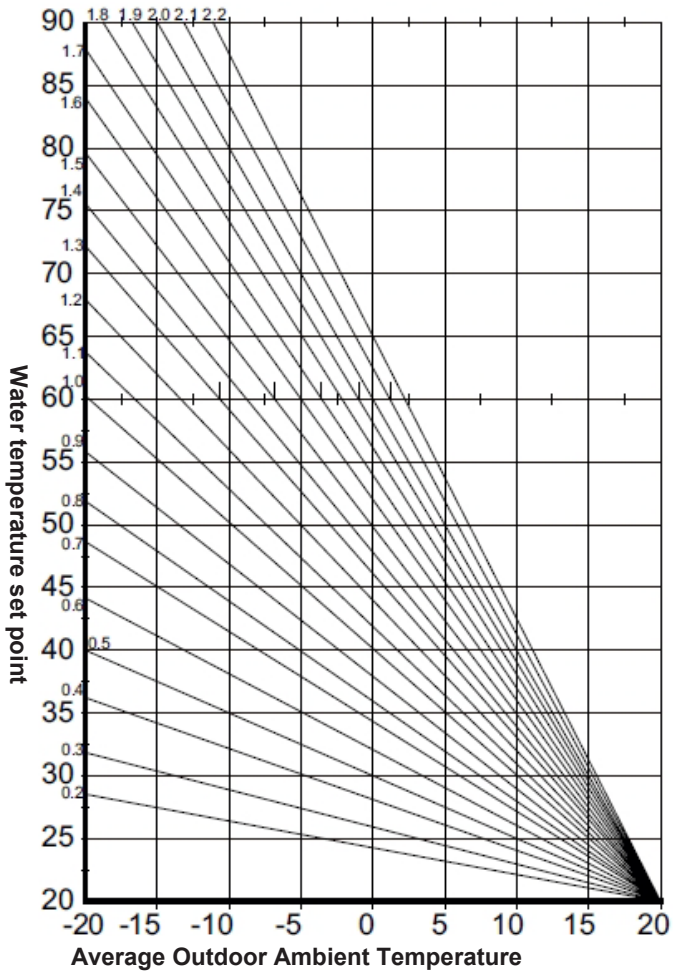

NOTE:

1.Ta: Average Outdoor Ambient Temperature (2 hours) is used to calculate set-point.

The configuration of this option should be done through the master controller

Configuration → Space heating → Cycle 1→ Water Regulation Mode→OTC Gradient

Mark	Description	Default Value	Range	Steps	Units
Cycle 1	Gradient Curve	0.6	0.2~2.2	0.1	——

Configuration → Space heating → Cycle 2→ Water Regulation Mode→OTC Gradient

Mark	Description	Default Value	Range	Steps	Units
Cycle 2	Gradient Curve	0.6	0.2~2.2	0.1	——

NOTE:

Average Outdoor Ambient Temperature (2 hours) is used to calculate set-point.

10.2.2.1.2 Water ECO offset

- Function

Use a reduced offset for water temperature setting. By using this function, current water temperature setting is reduced by the indicated parameter.

The configuration of this option should be done through the master controller

Configuration → Space heating →Cycle 1

Mark	Description	Default Value	Range	Steps	Units
c1_wate_Eco	water Eco	Disabled	Disabled/Enabled		
c1_wate_h_Ecoofs	Eco offset	2	-10~10	1	°C

Configuration → Space heating →Cycle 2

Mark	Description	Default Value	Range	Steps	Units
c2_wate_Eco	water Eco	Disabled	Disabled/Enabled		
c2_wate_h_Ecoofs	Eco offset	2	-10~10	1	°C

- Function activation

ECO offset function is active for each Cycle by different options:

(1) [water Eco] of specific Cycle on Configuration set as [Enabled]

(2) Optional input signal can be configured as function of Cycle 1 ECO mode / Cycle 2 ECO mode / Cycle 1 and 2 ECO mode and close the corresponding input terminal. refer to 10.10.1.

(3) [water Eco] of specific Water Cycle from interface of Water Cycle on master controller is pushed ON.

10.2.2.1.3 Compensation from Room thermostat

There are max. 4 room thermostats that can be incorporated to each Water Cycle (Cycle 1 and Cycle 2). Compensate water temperature setting by room temperatures and room temperature settings on the specific Cycles (Cycle 1 & 2) to operate space heating/cooling efficiently.

This function is available with the following possible combinations:

- Rooms function on Master controller is selected as room thermostat. Optional Auxiliary sensor on PCB1 of indoor unit can be configured as function of Room_amb1...7 and be selected as Room temperature detection. Refer to 10.10.
- Slave_Wired room controller can be selected as room thermostat.

When Room compensation is enabled, the calculated set point is adjusted according on the difference between the room temperature and room setting temperature. The amount of room influence can be adjusted by the room temperature compensation factor setting.

To increase or decrease the amount of room compensation, the room compensation factor should be adjusted.

(1) Cycle 1

The configuration of this option should be done through the master controller

Configuration → Space heating → Cycle 1→Room temperature Compensation

Mark	Description	Default Value	Range	Steps	Units
Rfacth_c1	Compensation factor	2	OFF-1-5	1	°C
Maxfacth _c1	Max Compensation value	10	0~10	1	°C
Minfacth _c1	Min Compensation value	-10	-10~0	1	°C

Compenh_c1= Rfacth_c1 × Maximum difference of room setting temperature and room temperature for Thermo On Rooms on Cycle 1

Minfacth _c1 ≤ Compenh_c1 ≤ Maxfacth _c1

(2) Cycle 2

The configuration of this option should be done through the master controller.

Configuration → Space heating → Cycle 1→Room temperature Compensation

Mark	Description	Default Value	Range	Steps	Units
Rfacth_c2	Compensation factor	2	OFF-1-5	1	°C
Maxfacth _c2	Max Compensation value	10	0~10	1	°C
Minfacth _c2	Min Compensation value	-10	-10~0	1	°C

Compenh_c2= Rfacth_c2 × Maximum difference of room setting temperature and room temperature for Thermo On Rooms on Cycle 2

Minfacth _c2 ≤ Compenh_c2 ≤ Maxfacth _c2

NOTE:

1. [Compensation factor] on Configuration set as [OFF] to inactive room thermostat compensation.
2. Use room thermostat compensation to increase target outlet water temperature dynamically according to room heating load with relative low set-point.

10.2.2.2 Second water temperature control

The mixing valve is controlled to maintain the second heating supply temperature at the second heating target outlet water temperature. The mixing valve position is calculated with a proportional integral action (P+I) control algorithm based on the difference between the heating target outlet water temperature and the heating supply temperature.

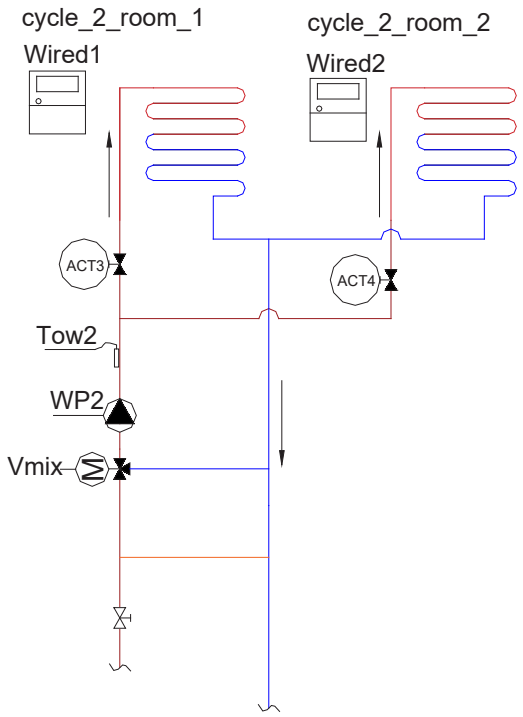

Cycle 2 mixing valve position

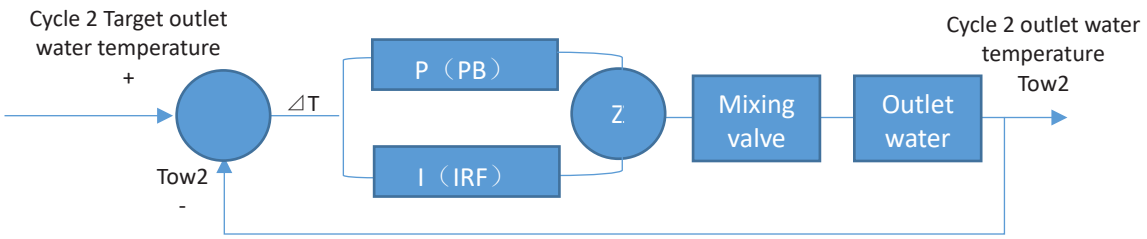

Where:

PB: Proportional band of mixing valve.

IRF: Integral reet factor of mixing valve.

RTV: running time factor of mixing valve.

The configuration of this option should be done through the master controller.

Configuration → Space heating → Cycle 2→Mixing valve

Mark	Description	Default Value	Range	Steps	Units
RTV	Rotation time	140	10-500s	10s	s
PB	Proportion Factor	6	0-20	0.2	%/°C
IRF	Integral Factor	2.5	0-20	0.1	%/°C.min
	Overheat protection offset	6	OFF, 3-10	1	°C

NOTE:

1. Mixing valve is field-supplied and Configuration should be adjusted based on the selected Mixing valve and operation confirmation.
2. [Overheat protection offset] is used in case of a mixing valve malfunction (i.e.: blocked). The protection has no effect in case it is set to OFF. Overheat in Water Cycle 2 may cause alarm 73 if Overheat protection is set .
3. Mixing valve has 2 operation terminals of closing valve and opening valve. Optional output signal need be configured as function of [Mixing valve Close] and [Mixing valve Open] and wire the Mixing valve based on the Configuration. Refer to10.10.
4. ESBE ARA661 is recommended as Mixing valve and bypass pipe before Mixing valve should be tuned to balance water circulation. Bypass pipe before Mixing valve can be skipped if equivalent Bypass replacement is fitted.

10.2.2.3 Thermo ON/OFF and capacity control

Space heating is operated by Water Cycle 1 or combination of Water Cycle 1 and Water Cycle 2. Space heating is demanded by request of water outlet temperature on Water Cycle 1 / Water Cycle 2 and Room thermostats.

There are 3 different ways to Thermo ON/OFF Space heating operation (heat pump and other heat resources running and stopping).

The configuration of this option should be done through the master controller.

Configuration →Heat Pump →Water Pump Configuration

Mark	Description	Default Value	Range	Steps	Units
Off_mode(heating)	WP ECO Mode Operation (heating)	ON	ON/OFF	-	-

(1) Thermo ON/OFF by room thermostats when [Off_mode(heating)] is set as [OFF].

In this situation, Water Cycle (Cycle 1 or Cycle 2) only operate with Room thermostats.

- Space heating is Thermo ON

If any one of room thermostats on the specific Water Cycle (Cycle 1 or Cycle 2) is Switch ON and Thermo ON, The corresponding Water Cycle will be Switch ON and Thermo ON. Then the heat pump and other heat source will be operated to meet demand. The heat pump and other heat source will be operated to achieve the Maximum value of Target outlet water temperature.

- Maximum value of Target outlet water temperature= [Ttwo_Cycle 1] if only room thermostats on Water Cycle1 is Thermo ON.
- Maximum value of Target outlet water temperature= [Ttwo_Cycle 2] if only room thermostats on Water Cycle2 is Thermo ON.
- Maximum value of Target outlet water temperature = Maximum value of [Ttwo_Cycle 1] and [Ttwo_Cycle 2] if room thermostats on both Water Cycle1 and Water Cycle2 is Thermo ON.
- Space heating is Thermo OFF
  If all of room thermostats on both Water Cycle (Cycle 1 or Cycle 2) is Thermo OFF. Then the heat pump and other heat source will stop operating.

(2) Thermo ON/OFF by request of water outlet temperature on Water Cycle 1 and Water Cycle 2 when [Off_mode(heating)] is set as [ON] and no room thermostats is available.

In this situation, Water Cycle (Cycle 1 or Cycle 2) can operate independently without Room thermostats by request of water outlet temperature.

- Space heating is Thermo ON when any of the following conditions is fulfilled.
- [Tow] ≤ [Ttwo_Cycle 1] -3°C (Cycle 1 Thermo ON).
- [Tow] ≤ [Ttwo_Cycle 2] -3°C (Cycle 2 Thermo ON).

Then the heat pump and other heat source will be operated to meet demand. The heat pump and other heat source will be operated to achieve the Maximum value of Target outlet water temperature.

- Space heating is Thermo OFF when all of the following conditions is fulfilled.
- [Tow] ≤ [Ttwo_Cycle 1] +4°C (Cycle 1 Thermo OFF)
- [Tow] ≤ [Ttwo_Cycle 1] +4°C (Cycle 1 Thermo OFF)

Then the heat pump and other heat source will stop operating.

(3) Thermo ON/OFF by combination of room thermostats and request of water outlet temperature on Water Cycle 1 and Water Cycle 2 when [Off_mode(heating)] is set as [ON] and room thermostats is available.

In this situation, Water Cycle (Cycle 1 or Cycle 2) can also operate by combination of request of water outlet temperature and Room thermostats, that means Space heating will be Thermo ON by request of water outlet temperature or Room thermostats. Oppositely the Water Cycle will be Thermo OFF when request of water outlet temperature and Room thermostats Thermo ON all disappear.

- Space heating is Thermo ON

Room thermostats in situation (1) or Request of water outlet temperature in situation (2) Thermo ON.

- Space heating is Thermo OFF

Room thermostats in situation (1) and Request of water outlet temperature in situation (2) all Thermo OFF.

NOTE:

1. [Tow]:Measured outlet water temperature
   [Tiw]:Measured inlet water temperature
   [Ttwo_Cycle 1]: heating Water Cycle1 Target outlet water temperature refers to 10.2.2.1.
   [Ttwo_Cycle 2]: heating Water Cycle2 Target outlet water temperature refers to 10.2.2.1.
2. Space heating can be Thermo ON only when measured outlet water temperature [Tow] is lower than Tmax.
3. Space heating will be forced Thermo OFF when measured outlet water temperature [Tow] is more than [Tmax + 3°C].
4. Tmax is Maximum outlet water temperature related outdoor ambient temperature that Heat pump can reach.

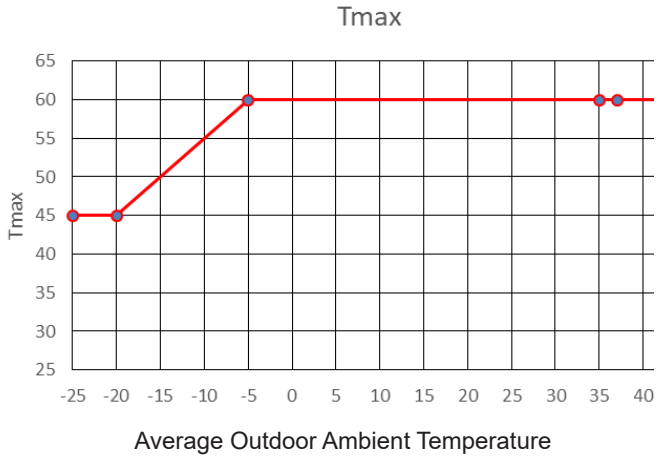

10.2.2.4 Heating Auto ON/OFF

When outside temperature rises, it is not necessary to keep the heat pump in heating mode. The system switches the heat to OFF when the average outdoor temperature of 24 hours rises above the Switch-OFF Temperature.

The configuration of this option should be done through the master controller.

Configuration → Space heating →Heating Auto ON/OFF.

Mark	Description	Default Value	Range	Steps	Units
Auto Heat	Status	Disabled	Disabled /Enabled	-	-
	Heating Auto temperature	24	18-26	1	°C

[Status] of [Auto Heat] can also be set through the master controller [favourite] button.

Mark	Description	Default Value	Range	Steps	Units
[favourite] button	Auto Heat	OFF	OFF/ON	-	-

Function:

① Space heating will be forced Thermo OFF when [Status] of [Auto Heat] is enabled and the average outdoor temperature of 24 hours is more than [Heating Auto temperature] + 1°C.

② Forced Thermo OFF will be cancelled when [Status] of [Auto Heat] is disabled Or the average outdoor temperature of 24 hours is lower than [Heating Auto temperature] - 1°C.

10.2.3 Water Cycle for space cooling

In addition, the unit can be combined with fan coils to delivery space cooling. When space cooling operation is required, the 3-way valve for cooling changes its normal position diverting to the fan coils, allowing to delivery cooling capacity.

Space cooling is operated by Water Cycle 1 or combination of Water Cycle 1 and Water Cycle 2.

Cycle 1 will be direct (low temperature for fan coils operation (5~12ºC)) and Cycle 2 will be a mixing cycle in order to have a second temperature control using mixing valve (medium temperature for floor refreshing operation (16~21ºC)). Additionally, a motorized valve can be added in order to close direct cycle when not in use . To get these 2 water temperature levels, a mixing station is required. This mixing station is controlled using the indoor unit by means of a mixing valve / additional pump (WP2) /additional water sensor (Tow2).

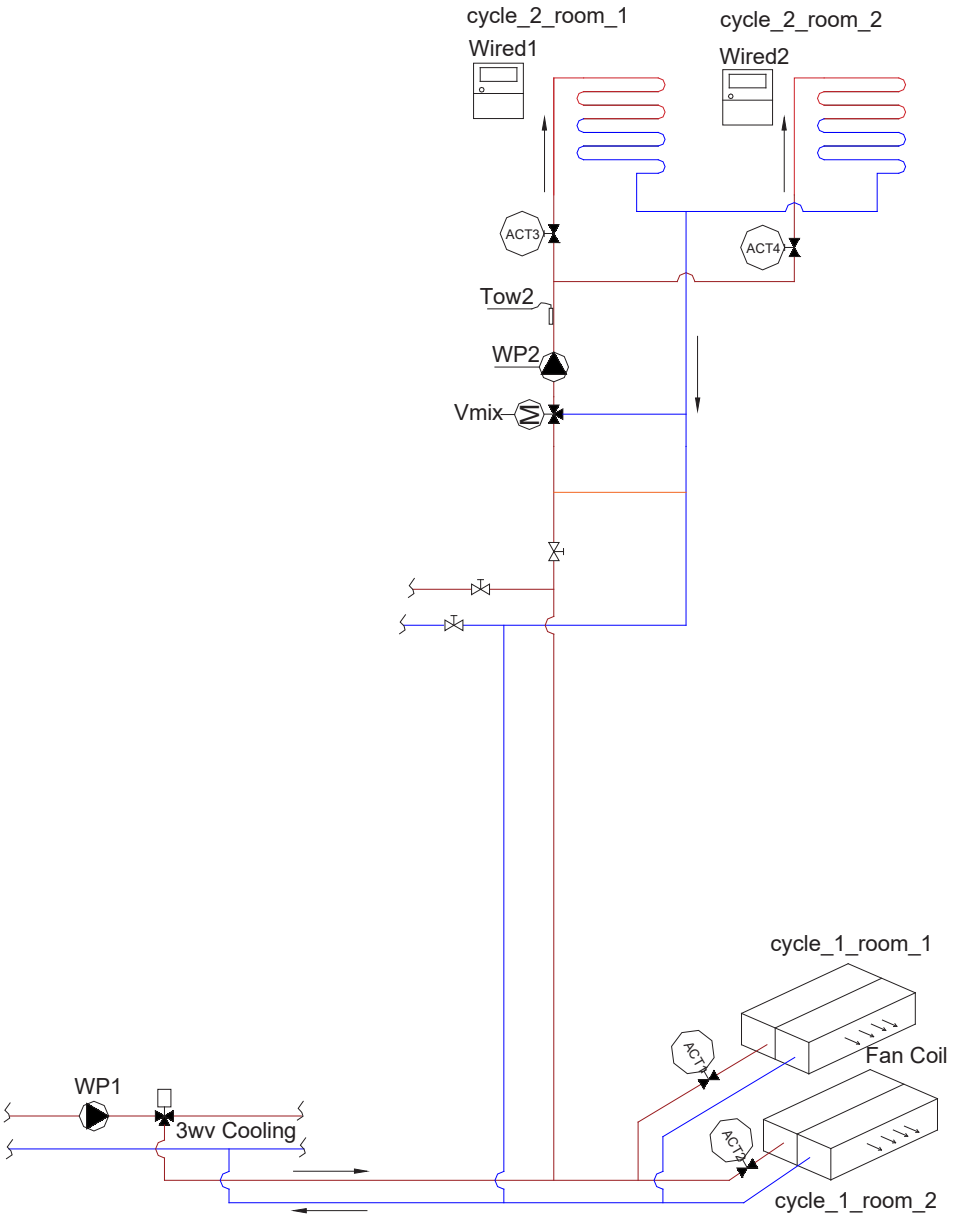

NOTE:

1. When space cooling is available Optional Output signal need be configured as function of [3WV cooling] to drive 3-way valve for space cooling.
2. When Cycle 2 is available Auxiliary sensor on PCB1 of indoor unit need be configured as function of [Tow2] . Refer to 10.10.
3. When Cycle 2 is available Optional Output signal need be configured as function of [WP2]. This Output signal can be used as relay signal to wp2. Refer to10.10.

The configuration of this option should be done through the master controller

Configuration → Space cooling →Cycle 1

Mark	Description	Default Value	Range	Steps	Units
Cycle 1_ Status	Status	Enabled	Disabled /Enabled	-	-

Configuration → Space cooling → Cycle 2

Mark	Description	Default Value	Range	Steps	Units
Cycle 2_ Status	Status	Disabled	Disabled /Enabled	-	-

10.2.3.1 Set target outlet water temperature

Each of the 2 Water Cycles will have an independent target outlet water temperature. And Target outlet water temperature is combination of Water Cycle set-point and compensation of Water ECO offset / Room thermostat.

(1) Cooling Water Cycle set-point can be define as follows:

Ttwo_c1 _water_c_p as Water Cycle 1.

Ttwo_c2 _water_c_p as Water Cycle 2.

There are 2 ways to set Water Cycle set-point as follows:

- Fixed, refer to 1.2.3.1.1 (1)
- OTC point, refer to 1.2.3.1.1 (2)

(2) Cooling Compensation of Water ECO offset defined as following, refer to 1.2.3.1.2

c1_wate_c_Ecoofs as Water Cycle 1.

c2_wate_c_Ecoofs as Water Cycle 2.

NOTE: Compensation of Water ECO offset is valid when the function is active.

(3) Cooling Compensation of Room thermostat defined as following, refer to 1.2.3.1.3

Compenc_c1 as Water Cycle 1.

Compenc_c2 as Water Cycle 2.

NOTE: Compensation of Room thermostat is valid when the function is active.

(4) Cooling Target outlet water temperature defined as

Ttwo_Cycle 1_c as Water Cycle 1.

Ttwo_Cycle 2_c as Water Cycle 2.

Cooling Target outlet water temperature is combination of Water Cycle set-point and compensation of Water ECO offset and Room thermostat.

Ttwo_Cycle 1_c= Ttwo_c1 _water_c_p - Compenc_c1 + c1_wate_c_Ecoofs

Ttwo_Cycle 2_c= Ttwo_c2 _water_c_p - Compenc_c2 + c2_wate_c_Ecoofs

NOTE: Compenh_c1 and Compenh_c2 is forced as 0 when water Calculation Regulation Mode set as [Fix] .

(5) Cooling Target outlet water temperature is regulated as following scope

c1_wate_c_min ≤ Ttwo_Cycle 1_c ≤ c1_wate_c_max

c2_wate_c_min ≤ Ttwo_Cycle 1_c ≤ c2_wate_c_max

The configuration of this option should be done through the master controller

Configuration → Space cooling→Cycle 1→ Working range

Mark	Description	Default Value	Range	Steps	Units
c1_wate_c_max	Max. Water Supply Temp	22	19~22	1	°C
c1_wate_c_min	Min. water Supply Temp	12	5~18	1	°C

Configuration → Space cooling→Cycle 2→ Working range

Mark	Description	Default Value	Range	Steps	Units
c2_wate_c_max	Max. Water Supply Temp	22	19~22	1	°C
c2_wate_c_min	Min. water Supply Temp	12	5~18	1	°C

NOTE:

1. It is the installer's responsibility to make sure no unwanted situation occurs (for example: water temperature setting too low into Refreshing floor installation).
2. In case of Radiator and Refreshing floor installation, Radiators valve should be closed and disabled by user and the system only works for refreshing floor.

10.2.3.1.1 Water temperature set-point

Water Cycle set-point can be set as follows:

The configuration of this option should be done through the master controller

Configuration → Space cooling→Cycle 1

Mark	Description	Default Value	Range	Steps	Units
Cycle 1	Water Regulation Mode	Fixed OTC point	Fixed	-	-

Configuration → Space cooling→Cycle 2

Mark	Description	Default Value	Range	Steps	Units
Cycle 2	Water Regulation Mode	Fixed OTC point	Fixed	-	-

(1) Fixed

Setting outlet water temperature is a fixed temperature set by the user on master controller . Refer to master controller manual.

The configuration of this option should be done through the master controller.

Main Interface → Space cooling→Cycle 1

Mark	Description	Default Value	Range	Steps	Units
Ttwo_c1 _water_c_p	Cycle 1 water temperature set-point	12	c1_wate_c_min~ c1_wate_c_max	1	°C

Main Interface → Space cooling→Cycle 2

Mark	Description	Default Value	Range	Steps	Units
Ttwo_c2 _water_c_p	Cycle 2 water temperature set-point	12	c2_wate_c_min~ c2_wate_c_max	1	°C

(2) OTC point

The weather-dependent set-point defines the parameters for weather-dependent operation of the unit. When weather-dependent operation is active the water temperature is determined automatically depending on the outdoor temperature: higher outdoor temperatures will result in colder water and vice versa.

OTC Points system will use average outdoor ambient temperature in order to get the water temperature set-point. Water set-point will be determined using the following rule.

① Water temperature set point of Water Cycle 1: Ttwo_c1 _water_c_p as following

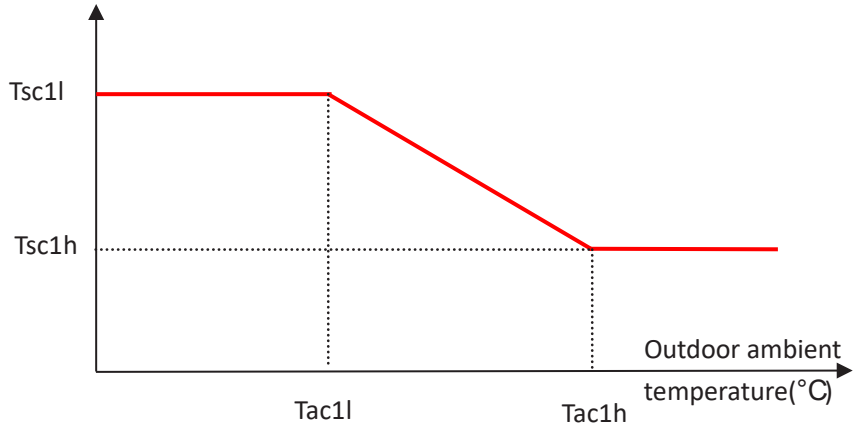

The configuration of this option should be done through the master controller

Configuration → Space cooling→ Cycle 1→ Water Regulation Mode→OTCpoint

Mark	Description	Default Value	Range	Steps	Units
Tac1l	low ambient temperature	23	17~30	1	°C
Tac1h	High ambient temperature	32	31~43	1	°C
Tsc1l	Water temperature at low ambient temperature	22	17~c1_wate_c_max	1	°C
Tsc1h	Water temperature at high ambient temperature	16	c1_wate_c_min~16	1	°C

① Water temperature set point of Water Cycle 2: Ttwo_c2 _water_c_p as following

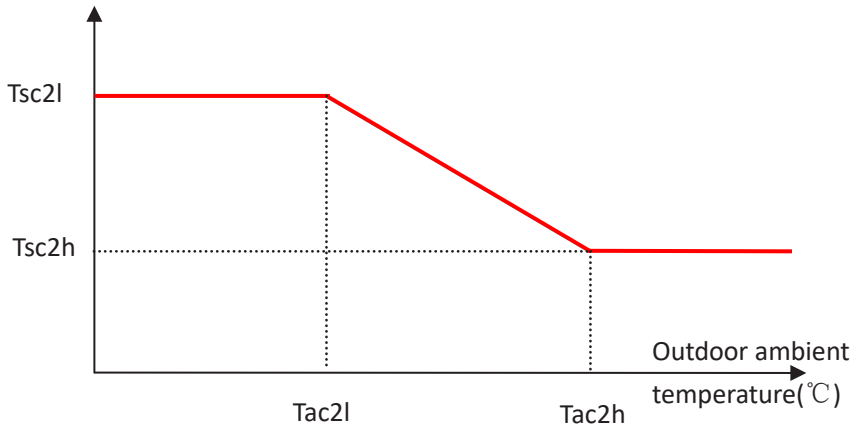

The configuration of this option should be done through the master controller

Configuration → Space cooling→ Cycle 1→ Water Regulation Mode→OTCpoint

Mark	Description	Default Value	Range	Steps	Units
Tac2l	low ambient temperature	23	17~30	1	°C
Tac2h	High ambient temperature	32	31~43	1	°C
Tsc2l	Water temperature at low ambient temperature	22	17~c2_wate_c_max	1	°C
Tsc2h	Water temperature at high ambient temperature	16	c2_wate_c_min~16	1	°C

NOTE:

Average Outdoor Ambient Temperature (2 hours) is used to calculate set-point.

10.2.3.1.2 Water ECO offset

- Function

Use a reduced offset for water temperature setting. By using this function, current water temperature setting is reduced by the indicated parameter.

The configuration of this option should be done through the master controller

Configuration → Space cooling→Cycle 1

Mark	Description	Default Value	Range	Steps	Units
c1_wate_Eco	water Eco	Disabled	Disabled/Enabled		
c1_wate_c_Ecoofs	Eco offset	1	-5~5	1	°C

Configuration → Space cooling→Cycle 2

Mark	Description	Default Value	Range	Steps	Units
c2_wate_Eco	water Eco	Disabled	Disabled/Enabled		
c2_wate_c_Ecoofs	Eco offset	1	-5~5	1	°C

- Function activation

ECO offset function is active for each cycle by different options:

(1) [water Eco] on Configuration set as [Enable]

(2) Optional input signal can be configured as function of Cycle 1 ECO mode / Cycle 2 ECO mode / Cycle 1 and 2 ECO mode and the corresponding input terminal is closed. refer to 10.10.1.

(3) [water Eco] of specific Water Cycle from interface of Water Cycle on master controller is pushed ON

10.2.3.1.3 Compensation from Room thermostat

There are max. 4 room thermostats that can be incorporated to each Water Cycle (Cycle 1 and Cycle 2). Compensate water temperature setting by room temperatures and room setting temperature on the specific cycles (Cycle 1 & 2) to operate space cooling/cooling efficiently.

This function is available with the following possible combinations:

- Rooms function on Master controller is selected as room thermostat. Optional Auxiliary sensor on PCB1 of indoor unit can be configured as function of Room_amb1...7 and be selected as Room temperature detection. Refer to 10.10.
- Slave_Wired room controller can be selected as room thermostat.

When Room compensation is enabled, the calculated set point is adjusted according on the difference between the Room temperature and room setting temperature. The amount of room influence can be adjusted by the Room temperature compensation factor setting.

To increase or decrease the amount of room compensation, the room compensation factor should be adjusted.

(1) Cycle 1

The configuration of this option should be done through the master controller

Configuration → Space cooling→ Cycle 1→Room temperature Compensation

Mark	Description	Default Value	Range	Steps	Units
Rfactc_c1	Compensation factor	OFF	OFF-1-5	1	°C
Maxfactc _c1	Max Compensation value	5	0~5	1	°C
Minfactc _c1	Min Compensation value	-5	-5~0	1	°C

Compenc_c1= Rfactc_c1 × Maximum difference of room temperature and room setting temperature for Thermo ON Rooms on Cycle 1

Minfactc _c1 ≤ Compenc_c1 ≤ Maxfactc _c1

(2) Cycle 1

The configuration of this option should be done through the master controller

Configuration → Space cooling→ Cycle 2→Room temperature Compensation

Mark	Description	Default Value	Range	Steps	Units
Rfactc_c2	Compensation factor	OFF	OFF-1-5	1	°C
Maxfactc _c2	Max Compensation value	5	0~5	1	°C
Minfactc _c2	Min Compensation value	-5	-5~0	1	°C

Compenc_c2= Rfactc_c2 × Maximum difference of room temperature and room setting temperature for Thermo ON Rooms on Cycle 2

Minfactc _c2 ≤ Compenc_c2 ≤ Maxfactc _c2

NOTE：

1. [Compensation factor] on Configuration set as [OFF] to inactive room thermostat compensation.
2. Use room thermostat compensation to decrease target outlet water temperature dynamically according to room cooling load with relative high set-point.

10.2.3.2 Second water temperature control

The mixing valve is controlled to maintain the second cooling supply temperature at the second cooling target outlet water temperature. The mixing valve position is calculated with a proportional integral action (P+I) control algorithm based on the difference between the cooling target outlet water temperature and the cooling supply temperature.

Cycle 2 mixing valve position

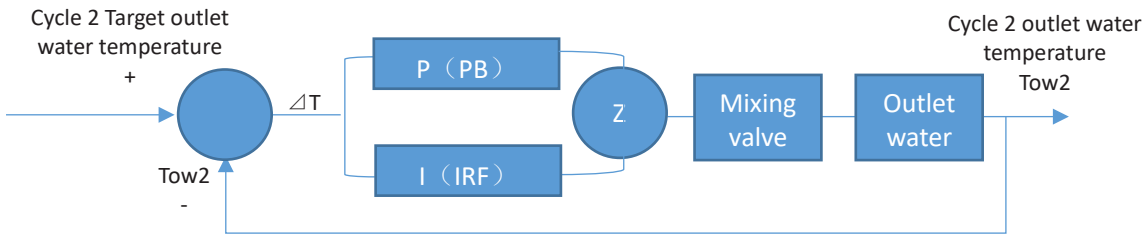

Where:
PB: Proportional band of mixing valve.
IRF: Integral reet factor of mixing valve.
RTV: running time factor of mixing valve.

The configuration of this option should be done through the master controller.

Configuration → Space cooling→ Cycle 2→Mixing valve

Mark	Description	Default Value	Range	Steps	Units
RTV	Rotation time	140	10-500s	10s	s
PB	Proportion Factor	6	0-20	0.2	%/°C
IRF	Integral Factor	2.5	0-20	0.1	%/°C.min
	Overheat protection offset	6	OFF, 3-10	1	°C

NOTE：

1. Mixing valve is field-supplied and Configuration should be adjusted based on the selected Mixing valve and operation confirmation.
2. [Overheat protection offset] is not available in cooling operation.
3. Mixing valve has 2 operation terminals of closing valve and opening valve. Optional output signal need be configured as function of [Mixing valve Close] and [Mixing valve Open] and wire the Mixing valve based on the Configuration. Refer to10.10.
4. ESBE ARA661 is recommended as Mixing valve and bypass pipe before Mixing valve should be tuned to balance water circulation. Bypass pipe before Mixing valve can be skipped if equivalent Bypass replacement is fitted.

10.2.3.3 Thermo ON/OFF and capacity control

Space cooling is operated by Water Cycle 1 or combination of Water Cycle 1 and Water Cycle 2. Space cooling is demanded by request of water outlet temperature on Water Cycle 1 / Water Cycle 2 and Room thermostats.

There are 3 different ways to Thermo ON/OFF Space cooling operation (heat pump running and stopping).

The configuration of this option should be done through the master controller.

Configuration →Heat Pump →Water Pump Configuration

Mark	Description	Default Value	Range	Steps	Units
Off_mode(cooling)	WP ECO Mode Operation (cooling)	OFF	ON/OFF	-	-

(1) Thermo ON/OFF by room thermostats when [Off_mode(cooling)] is set as [OFF].

In this situation, Water Cycle (Cycle 1 or Cycle 2) only operate with Room thermostats.

- Space cooling is Thermo ON

If any one of room thermostats on the specific Water Cycle (Cycle 1 or Cycle 2) is Switch ON and Thermo ON, The corresponding Water Cycle will be Switch ON and Thermo ON. Then the heat pump will be operated to meet demand. The heat pump will be operated to achieve the Minimum value of Target outlet water temperature.

- Minimum value of Target outlet water temperature= [Ttwo_Cycle 1_c] if only room thermostats on Water Cycle1 is Thermo ON.
- Minimum value of Target outlet water temperature= [Ttwo_Cycle 2_c] if only room thermostats on Water Cycle2 is Thermo ON.

- Minimum value of Target outlet water temperature = Minimum value of [Ttwo_Cycle 1_c] and [Ttwo_Cycle 2_c] if room thermostats on both Water Cycle1 and Water Cycle2 is Thermo ON.

- Space cooling is Thermo OFF

If all of room thermostats on both Water Cycle (Cycle 1 or Cycle 2) is Thermo OFF. Then the heat pump will stop operating.

(2) Thermo ON/OFF by request of water outlet temperature on Water Cycle 1 and Water Cycle 2 when [Off_mode(cooling)] is set as [ON] and no room thermostats is available .

In this situation ,Water Cycle (Cycle 1 or Cycle 2) can operate independently without Room thermostats by request of water outlet temperature.

- Space cooling is Thermo ON when any of the following conditions is fulfilled.
- [Tow] ≥ [Ttwo_Cycle 1_c] and [Tiw] ≥ [Ttwo_Cycle 1_c] +5°C (Cycle 1 Thermo ON).
- [Tow] ≥ [Ttwo_Cycle 2_c] and [Tiw] ≥ [Ttwo_Cycle 2_c] +5°C (Cycle 2 Thermo ON).

Then the heat pump will be operated to meet demand. The heat pump will be operated to achieve the Minimum value of Target outlet water temperature.

- Space cooling is Thermo OFF when all of the following conditions is fulfilled.
- [Tow] ≤ [Ttwo_Cycle 1_c] -4°C or [Tow] ≤ 3°C (Cycle 1 Thermo OFF).
- [Tow] ≤ [Ttwo_Cycle 2_c] -4°C or [Tow] ≤ 3°C (Cycle 2 Thermo OFF).

Then the heat pump will stop operating.

(3) Thermo ON/OFF by combination of room thermostats and request of water outlet temperature on Water Cycle 1 and Water Cycle 2 when [Off_mode(cooling)] is set as [ON] and room thermostats is available.

In this situation, Water Cycle (Cycle 1 or Cycle 2) can also operate by combination of request of water outlet temperature and Room thermostats, that means Space cooling will be Thermo ON by request of water outlet temperature or Room thermostats. Oppositely the Water Cycle will be Thermo OFF when request of water outlet temperature and Room thermostats Thermo ON all disappear.

- Space cooling is Thermo ON

Room thermostats in situation (1) or Request of water outlet temperature in situation (2) Thermo ON.

- Space cooling is Thermo OFF

Room thermostats in situation (1) and Request of water outlet temperature in situation (2) all Thermo OFF.

NOTE:

[Tow]:Measured outlet water temperature

[Tiw]:Measured inlet water temperature

[Ttwo_Cycle 1_c : cooling Water Cycle1 Target outlet water temperature

[Ttwo_Cycle 2_c] : cooling Water Cycle2 Target outlet water temperature

10.2.4 Auto HEAT/COOL

The end-user set the desired operation mode on the controller: Heating, Cooling or Automatic. When Automatic is selected, the change of the operation mode is based on averaged outdoor temperature. As long the outdoor temperature changes, the system changes to match the system requirements. If outdoor temperature drops, the operation mode switches to heating, and vice versa.

Space mode should be done through the master controller interface.

Main Interface → Space mode

Mark	Description	Default Value	Range	Steps	Units
	Space mode	-	Heat/Cool/Auto		

The configuration of this option should be done through the master controller.

Configuration →Auto Heat/Cool

Mark	Description	Default Value	Range	Steps	Units
Hoff	Switch to Space heating	22	10-23	1	°C
Coff	Switch to Space Cooling	25	24-35	1	°C

Space heating and space cooling will be decided as following When Space mode set [Auto]

① Space heating will be set when the average outdoor temperature of 24 hours is lower than [Hoff].
② Space cooling will be set when the average outdoor temperature of 24 hours is more than [Coff].

10.2.5 Hydraulic separator

In some installations, water pump of the unit is not sized for big heating installations (small water pump). In those cases, a hydraulic separator or buffer tank, as a extra water pump, has to be used to ensure a proper water pump dimensioning.

The boiler is configured with the heat pump. A hydraulic separator or buffer tank has to be used to ensure a proper hydraulic balancing. Additional water pump [WP3] and water sensor [Tow3] is needed for the boiler combination control.

Some installations need a big buffer tank in combination with an auxiliary heating system (boiler, pellets, solar panels, etc.). In those cases, the control of the water temperature can be done by an external temperature sensor (Tow3) to heat the water of that tank.

For example, the system works for only one zone application.

Using the buffer tank in combination with a boiler, Cycle 1 is working as Cycle 2 in a mixing loop. With this system, the configuration of the Unit controller is like for 2 Cycles:

Cycle 1: Buffer tank working as Cycle 1

Cycle 2: Mixing circuit for space heating

NOTE:

1. Settings for Cycle 1 must be always higher than for Cycle 2.
2. Room thermostats must be incorporated only to Water Cycle 2. And [Off_mode(heating)] is set as [ON].
3. Cycle 1 only works as a buffer tank.

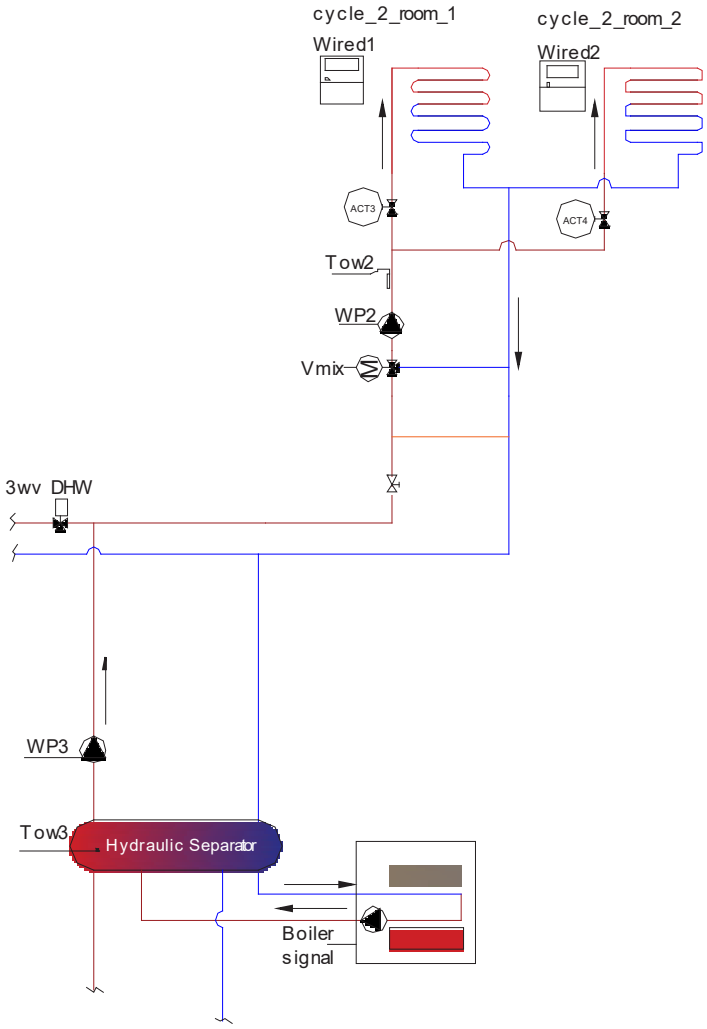

The configuration of this option should be done through the master controller.

Configuration →Complementary Heating →Boiler

Mark	Description	Default Value	Range	Steps	Units
hsb	Hydraulic Separator Status	Disabled	Disabled / Enabled		

NOTE:

1. When hydraulic separator is Enabled ,Auxiliary sensor on PCB1 of indoor unit must be configured as function of [Tow3] . and water sensor [Tow3] must be embedded in hot water side of hydraulic separator to detect hot water temperature from the hydraulic separator. Refer to 10.10.
2. When hydraulic separator is Enabled, Optional Output signal need be configured as function of [WP3].and Additional water pump [WP3] must be activated by [WP3] Output signal. This Output signal can be used as relay signal to wp3. Refer to10.10.
3. When hydraulic separator is Enabled and water sensor (Tow3) is available, Tow3 is used to achieve Thermo ON/OFF and capacity control (referring to 10.2.2.3 and 10.2.3.3) instead of [Tow].
4. Hydraulic separator is not recommended with big water volume (less than 25L) when DHW is combined in the system, that will cause less efficiency and additional heating time to heat up DHW tank.

10.3 DHW

In addition, the unit can be combined with sanitary tank to delivery DHW. When DHW operation with heat pump is required, the 3-way valve for DHW changes its normal position diverting to the sanitary tank inner coil, allowing to heat the tank water temperature.

DHW operation should be enabled from the master controller.

DHW can be heated up by heat pump / DHW Electric Heater / boiler / solar panel depending on heat source availability and setting.

The configuration of DHW availability should be done through the master controller.

Configuration →DHW

Mark	Description	Default Value	Range	Steps	Units
DHW_hts	Status	Enabled	Disabled /Enabled	-	-

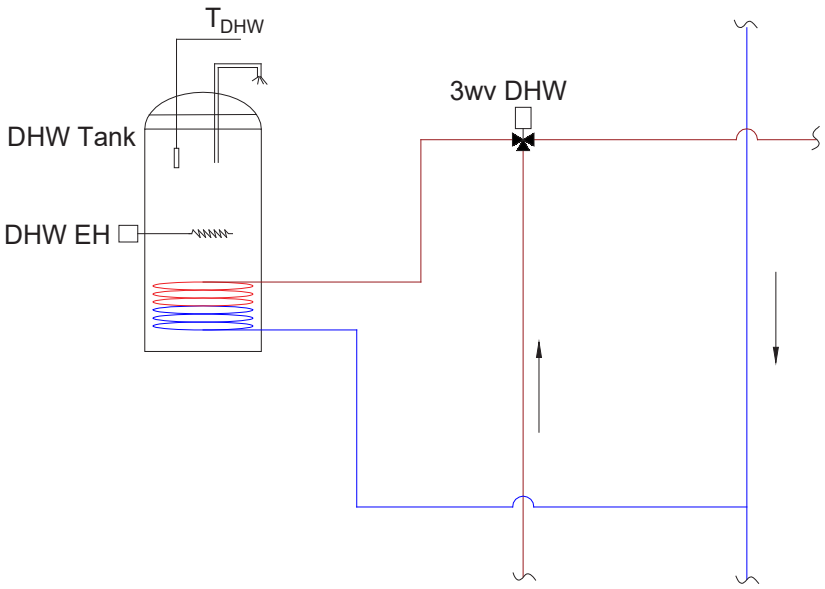

NOTE:

1. When DHW is available DHW sensor of [TDHW] on PCB1 of indoor unit need be added to detect DHW water temperature.
2. DHW sensor of [TDHW] must be embedded in hot water side of DHW tank to detect hot water temperature.
3. When DHW is available Optional Output signal need be configured as function of [3WV DHW] to drive 3-way valve for DHW.
4. Inner coil surface area is critical to heat up DHW with heat pump. Inadequate coil surface area will cause less efficiency, additional heating time, and stoppage of heat pump.

10.3.1 DHW setting temperature

DHW setting temperature should be done through the master controller interface.

Main Interface → DHW

Mark	Description	Default Value	Range	Steps	Units
TDHWS	DHW Setting temperature		40- TDHWS_max	1	°C

In order to prevent high hot water in the tank an additional function of [Max. Setting Temp] is added:

The configuration of this option should be done through the master controller.

Configuration →DHW

Mark	Description	Default Value	Range	Steps	Units
TDHWS_max	Max. Setting Temp	55	40-A	1	°C

NOTE：

1. When DHW Electric Heater is available ([DHW_hts] set as [Enabled] , refer to 10.3.3), A=75°C.
2. When Boiler is available and DHW by Boiler is enabled ([HS] set as [HP+Heater+Boiler] or [HP+Heater+Boiler] and [DHW_B] set as [Enable] , refer to 10.6.3), A=60°C.
3. circumstance except 1 and 2 , A=55°C.
4. In case of heating up the DHW tank with an outdoor ambient temperature lower than -5ºC and without using the DHW electrical heater, the setting temperature should not exceed the maximum value in the specified continuous working range.

10.3.2 DHW operation with heat pump

When DHW operation with heat pump is required, the 3-way valve for DHW changes its normal position diverting to the sanitary tank inner coil, allowing to heat the tank water temperature.

The configuration of this option should be done through the master controller.

Configuration →DHW

Mark	Description	Default Value	Range	Steps	Units
DHW_HP_mode	Control	Powerful	Powerful / Efficient		
DHW_HP_diff	HP ON Differential Temp	5	1-10	1	°C
DHW_HP_tmax	HP ON Max. Time	60	20~250~unlimited	1	min
DHW_HP_cycle	HP ON interval	1	0-24	1	hour

(1) Heat pump can heat up DHW with 2 different control modes: [Powerful] and [Efficient].

- [Powerful]: This is fast way to heat DHW. Target outlet water temperature of DHW operation is 30°C higher than the tank temperature.
- [Efficient] :The efficient way to heat DHW. Target outlet water temperature of DHW operation 15°C higher than the tank temperature.

(2) [DHW_HP_diff]: Hysteresis for the start of DHW heating operation with Heat pump.

(3) [DHW_HP_tmax]: Maximum time that DHW will be heat up by heat pump, after that time heat pump stops operating by this function and DHW is still heated by DHW Electric Heater when it is enabled, until other conditions request stoppage. This function is invalid when [DHW_HP_tmax] is set [unlimited].

(4) [DHW_HP_cycle]: the minimum time between 2 heat pump cycles of DHW operation, after that time heat pump will be able to operate again to heat up DHW when heat pump is stopped by the function of [DHW_HP_tmax].

10.3.3 DHW operation with DHW Electric Heate

DHW Electric Heater (DHW EH) is on-site accessory to deliver additional heating capacity during cold outdoor temperatures. The electrical heater can also be used for emergency operation in case of outdoor unit malfunction.

NOTE:

For DHW Electric Heater Optional Output signal need be configured as function of [DHW Electric Heater] to drive relay. The power supply of DHW Electric Heater connects to terminals HL-HN and build-in Safety thermostat of DHW Electric Heater connects to terminals L1-I12 (DHW The2).

The configuration of this option should be done through the master controller.

Configuration →DHW→ DHW Electrical Heater

Mark	Description	Default Value	Range	Steps	Units
DHW_hts	Status	Disabled	Disabled /Enabled		
DHW_ht_mode	mode	Standard	Standard/ H.Demand		
DHWEH	Waiting Time	45	0~DHW_HP_tmax+70	1	min
DHW_ht_diff	ON Differential Temp	6	1-10	1	°C

(1) DHW Electric Heater is activated when [DHW_hts] is set as [Enabled].

(2) DHW Electric Heater can be forced off if DSW4-3: OFF. Forcing off DHW electric heater by DSW4-3: OFF is invalid when DHW Emergency operation (referring to 10.1.3.2), DHW Boost operation (referring to 10.3.6), DHW Anti-legionella operation (referring to 10.3.5) or HP Block operation (referring to10.9.5). The heater is forced off with factory setting. Set DSW4-3: ON to cancel forcing off through the Dip switch on PCB1.

(3) DHW Electric Heater can heat up DHW on 2 different modes: [Standard] and [H.Demand].

- Standard: DHW will be heat up by heat pump prior to DHW Electric Heater when water temperature in the tank [TDHW] is low enough to start up the heat pump. Then DHW Electric Heater will start to heated up DHW when water temperature in the tank is too high to run the heat pump. This is an efficient way to use energy.
- High Demand: DHW Electric Heater operation starts if water temperature in the tank [TDHW] and DHW setting temperature [TDHWS] difference is larger than differential temperature [DHW_ht_diff]. DHW can be heated up using the heater, heat pump, or a combination of both without priority. This is fast way to heat up DHW.

(4) [DHWEH]: DHW Electric heater waiting time, after that time heat pump heats up DHW and Heat Pump cannot give enough capacity it will be necessary to start Heater in order to supply additional capacity. Then DHW Electric Heater starts. [DHWEH] only available when [DHW_ht_mode] is set as [Standard].

(5) [DHW_ht_diff]: Hysteresis for the start of DHW heating operation with DHW Electric Heater.

10.3.4 DHW operation by heat pump and Heater

(1) [DHW_ht_mode] is set [Standard]

DHW is heated up by heat pump and DHW Electric Heater sequentially When [DHW_ht_mode] is set [Standard]. Low temperature part of DHW is heated up by heat pump until max temperature of THPSTOP or DHW Electric heater waiting time[DHWEH], and then the remain high temperature part of DHW is done by DHW Electric Heater.

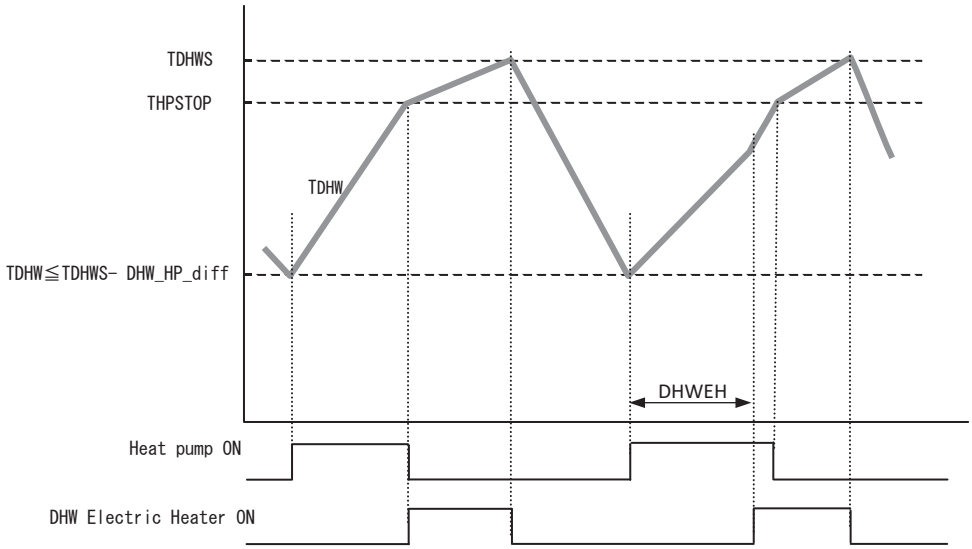

NOTE:

Max. DHW operation time of [HP ON Max. Time] will be add extra 70 minutes to heat up DHW in one period time of DHW operation shift When DHW schedule priority is activated at specific setting Starting Time. Take the extra time into consideration when setting DHW Electric heater waiting time of [DHWEH]. Refer to 10.1.2.1.1.

(2) [DHW_ht_mode] is set [H.Demand]

DHW is heated up by heat pump and DHW Electric Heater in parallel when [DHW_ht_mode] is set [H.Demand]. Whenever heat pump and DHW Electric Heater meet operating conditions, they will work to heat up DHW.

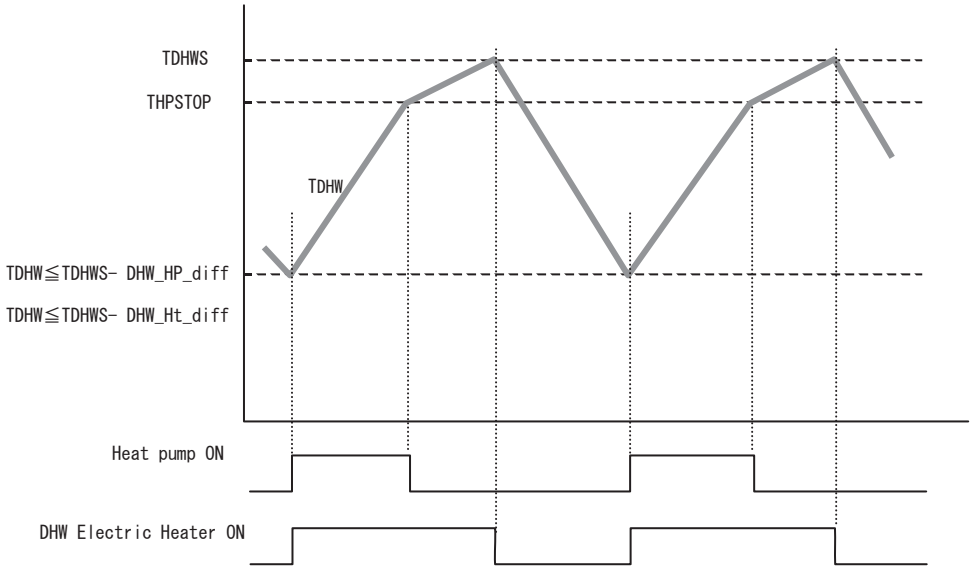

NOTE:

When average outdoor ambient temperature is more than 38°C-40°C , that is out of heat pump heating operation range , DHW Electric Heater will operate on mode of [H.Demand] even if setting as mode of [Standard].

(3) Maximum DHW operation time by heat pump: [DHW_HP_tmax]

This function of [DHW_HP_tmax] controls the maximum time that DHW operation can work using Heat Pump. DHW Electric Heater operation is not affected by it. For example the heater will continue to heat up DHW as [DHW_ht_mode] is set [Standard] after heat pump is stopped by the function of [DHW_HP_tmax] . Heat pump will be able to operate again to heat up DHW after heat pump off time of [DHW_HP_cycle].

This function of [DHW_HP_tmax] is applied when [DHW_ht_mode] is set [Standard] or [H.Demand].

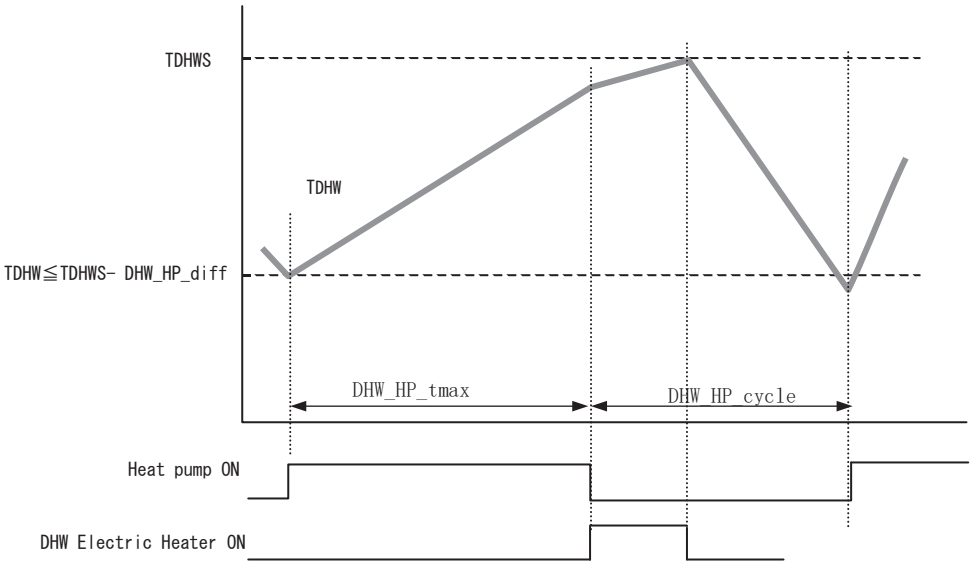

Where:

TDHWS: DHW Setting temperature (ºC).
Tmax: Heat pump maximum temperature (defined by unit working range), Refer to 10.2.2.3.
THPSTOP: Temperature which the heat pump stop heat the tank.

NOTE:

Tow/Tow3 should be lower than 55°C to start heat pump.

(4) DHW Electric Heater operates during Space heating/cooling.

When heat pump shift to Space heating/cooling operation at the time that DHW schedule priority is activated (referring to 10.1.2.1.1) and DHW setting temperature (TDHWS) is not met, it is possible that heat pump does not have enough capacity to heat up DHW in this DHW operation shift. So DHW Electric Heater can start to offer additional capacity.

- DHW Electric Heater will start if:

① Heat pump shift to Space heating/cooling operation form DHW operation referring to 10.1.2.1.1.
② Current DHW temperature (TDHW) is lower than DHW setting temperature (TDHWS) -2 °C.
③ DHW schedule priority is activated at specific setting Starting Time referring to 10.1.2.1.1 (1).
Or
① Heat pump is Space cooling operation.
② Average outdoor ambient temperature is more than 38°C-40°C , that is out of heat pump heatingoperation range.
③ Current DHW temperature (TDHW) is lower than DHW setting temperature (TDHWS) - [DHW_ht_diff] °C.
④ DHW schedule priority is activated at specific setting Starting Time referring to 10.1.2.1.1 (1).

- DHW Electric Heater will stop if:

DHW setting temperature (TDHWS) is met or Auxiliary electric heater starts.

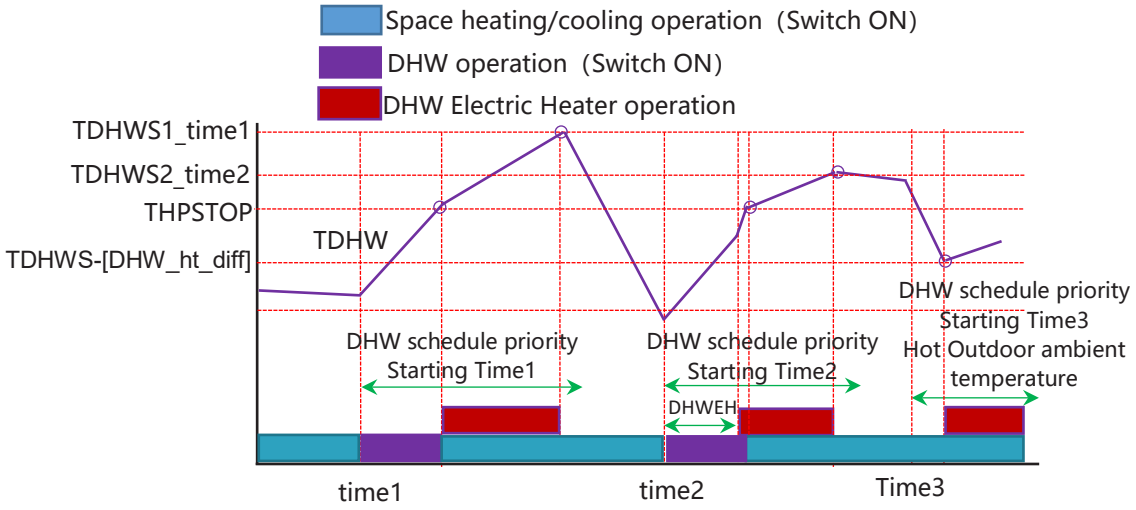

10.3.5 DHW Anti-legionella protection

In order to help prevent against Legionella in the domestic hot water system, the DHW set point can be raised to a higher than normal temperature. The Legionella protection only makes sense if there is a DHW electric heater to raise the DHW temperature to this high temperature.

Heat pump and DHW Electric Heater will work at mode of [H.Demand] to achieve quick heating up.

DHW Anti-legionella can be activated by manual ON or weekly timer.

- DHW Anti-legionella can be activated by manual ON through the master controller interface of DHW.

The operation of this function should be done through the master controller interface of DHW.

Mark	Description	Default Value	Range	Steps	Units
	DHW Antilegionella	OFF	OFF/ON	-	-

NOTE:

DHW Anti-legionella manual ON through the master controller interface of DHW will be forced off after specific time (about 80minutes).

- DHW Anti-legionella can also be activated by weekly timer.

The configuration of this option should be done through the master controller.

Configuration →Auxiliary Function → DHW-Anti Legionella

Mark	Description	Default Value	Range	Steps	Units
Anti_Legionella Status	Status	Disabled	Disabled/Enabled	_	_
Anti_Legionella_OpInt	Operation day	Sunday	Daily/Mon~Sun	_	day
Anti_Legionella_StTim	Starting Time	01:00	(00:00~23:50)	00:10	time
TDHWS_Anti_Legionella	Setting temperature	A	40~A*	5	°C
Anti_Legionella_Keep	Duration Time	10	10~60	5	min

NOTE:

When DHW Electric Heater is available ([DHW_hts] set as [Enabled] , referring to 10.3.3), A=75°C. Otherwise A=60°C.

① Status: defines whether the Anti Legionella function is turned Disabled or Enabled.
② Operation Day: day of the week at which DHW Anti-legionella will work.
③ Starting time: time of the day at which DHW Anti-legionella will work.
④ Setting temperature: high water temperature of tank to be reached.
⑤ Duration Time: time period defining how long the set point temperature should be maintained.

NOTE:

1. If DHW electric heater is unavailable and Anti-legionella Setting temperature is too high, DHW will be heated up to the max temperature by heat pump.
2. DHW electric heater will work as mode of [H.Demand] and confine of [DHW_ht_diff] =1°C to achieve high temperature quickly. Forcing off DHW electric heater by DSW43: OFF is invalid during DHW Anti-legionella operation.

10.3.6 DHW Boost

It is possible to request a one-time heating up of DHW temperature up to DHW Boost temperature setting. This can be useful when spontaneous DHW Demand for one day.

Heat pump and DHW Electric Heater will work at mode of [H.Demand] to achieve quick heating up.

The configuration of this option should be done through the master controller.

Configuration →Auxiliary Function → DHW-Boost

Mark	Description	Default Value	Range	Steps	Units
DHW_Boost	Trigger type	Push	Disabled/Push/Open/Closed	_	_
TDHWS_ Boost	Setting temperature	A	40~A*	5	°C

NOTE:

1. When DHW Electric Heater is available ([DHW_hts] set as [Enabled] , refer to 10.3.3), A=75°C.
2. When Boiler is available and DHW by Boiler is enabled ([HS] set as [HP+Heater+Boiler] or [HP+Heater+Boiler] and [DHW_B] set as [Enabled] , refer to 10.6.3), A=60°C.
3. circumstance except 1 and 2, A=55°C.

To start a DHW Boost operation, users have 2 options:

- DHW Boost can be activated by manual ON through the master controller [favourite] button or interface of DHW when [Trigger type] is set as [Push].

The operation of this function should be done through the master controller [favourite] button or interface of DHW.

Mark	Description	Default Value	Range	Steps	Units
master controller [favourite] button or interface of DHW	DHW Boost		OFF/ON	-	-

- DHW Boost can also be activated by Optional input signal of DHW Boost when [Trigger type] is set as [Open] or [Closed].

Optional input signal can be configured as function of [DHW Boost], refer to 10.10.1.

Closing corresponding input terminal will activate DHW Boost if [Trigger type] is set as [Closed].

Opening corresponding input terminal will activate DHW Boost if [Trigger type] is set as [Open].

NOTE:

1. If DHW electric heater is unavailable and DHW Boost Setting temperature is too high, DHW will be heated up to the max temperature by heat pump.
2. DHW electric heater will work as mode of [H.Demand] and confine of [DHW_ht_diff] ≤ 3°C to achieve setting temperature quickly(referring to 10.3.3). Forcing off DHW electric heater by DSW4-3: OFF is invalid during DHW Boost operation.

10.3.7 DHW Recirculation pump

Output signal to drive relay of a re-circulation pump in case of re-circulation pump is available for DHW tank. By using this output, user can heat all the water inside DHW system when heating DHW by Heat Pump. This output can also be used with Legionella and timer function.

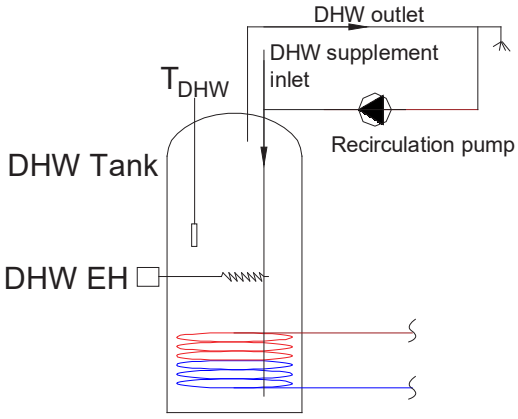

NOTE:

When DHW Recirculation pump is available Optional Output signal need be configured as function of [DHW re-circulation pump] to drive relay of a re-circulation pump.

The configuration of this option should be done through the master controller.

Configuration →Auxiliary Function →DHW-Recirculation pump

Mark	Description	Default Value	Range	Steps	Units
DHW_recirp	DHW-Recirculation pump	Disabled	Disabled Demand Anti-Legionella Timer Timer+ Demand Timer+ Anti-Legionella Timer+ Demand+ Anti-Legionella	–	–

(1) [DHW_recirp] set as [Disabled] to invalid DHW Recirculation pump function.

(2) [DHW_recirp] set as [Demand]
Output ON signal in case that DHW is demand ON or DHW Electric Heater is ON.

(3) [DHW_recirp] set as [Anti-Legionella]
Output ON signal in case that DHW Anti-legionella protection is operated.

(4) [DHW_recirp] set as [Timer]

Output ON/OFF signal periodically (ON 4min and OFF 8min) one hour later after DHW schedule priority is activated at [Starting Time 1/2/3/4] and This Output will last 2 hours. Refer to 10.1.2.1.1.

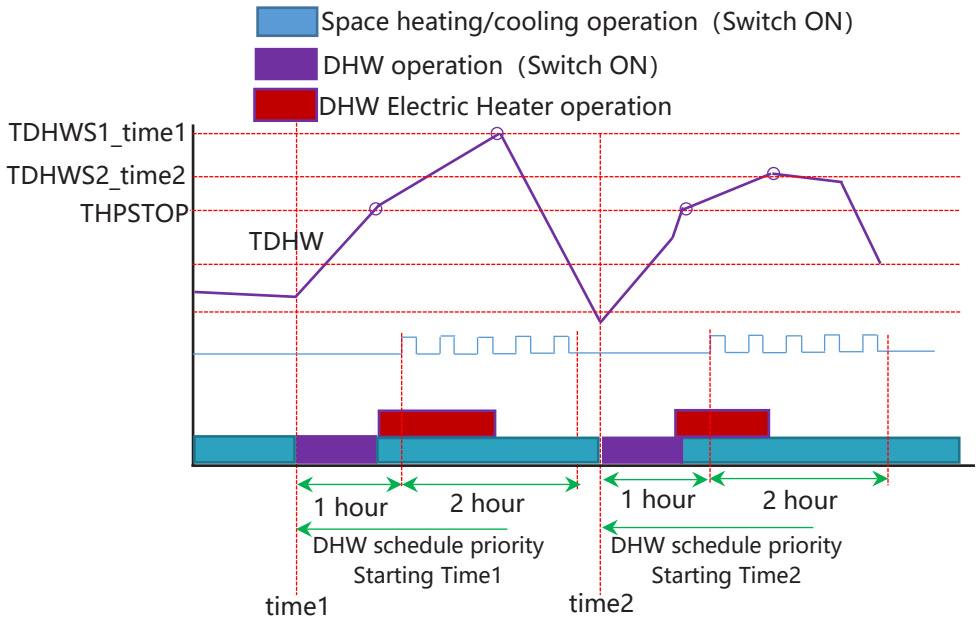

(5) [DHW_recirp] set as [Timer+ Demand]
Output ON signal in case that conditions of (2) or (4) are met.

(6) [DHW_recirp] set as [Timer+ Anti-Legionella]
Output ON signal in case that conditions of (3) or (4) are met.

(7) [DHW_recirp] set as [Timer+ Demand+ Anti-Legionella]
Output ON signal in case that conditions of (2) , (3) or (4) are met.

10.3.8 DHW Electric Heater during Emergency operation

DHW Electric Heater Operation during Emergency operation

DHW Electric Heater Operation during Emergency operation (referring to 10.1.3.2) as following:

1.Forcing off DHW electric heater by DSW4-3:OFF is invalid when DHW Emergency operation.

2.DHW Electric Heater will work at mode of [H.Demand] (referring to 10.3.4) .

10.4 Swimming pool

In addition, the unit can be combined with swimming pool. When the swimming pool operation is required, the 3-way valve for the swimming pool changes its normal position diverting to the swimming pool heat exchanger, allowing to heat the swimming pool water temperature to a comfortable value.

The configuration of swimming pool availability should be done through the master controller.

Configuration →Swimming Pool

Mark	Description	Default Value	Range	Steps	Units
Swimming Pool status	Status	Disabled	Disabled /Enabled	-	-

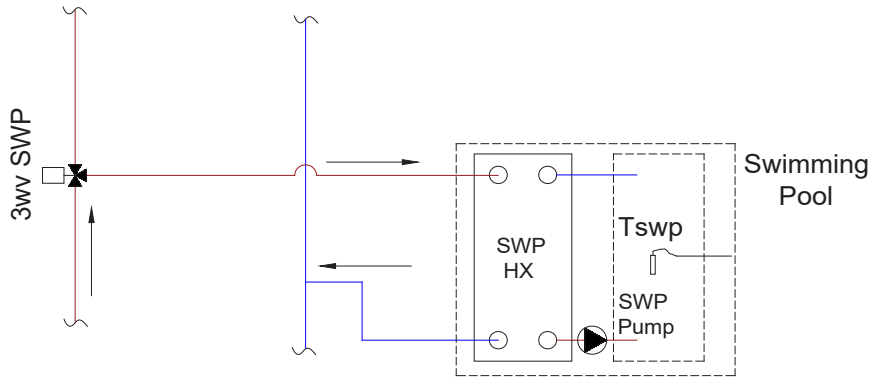

NOTE:

1. When swimming pool is available Auxiliary sensor on PCB1 of indoor unit need be configured as function of [Tswp] to detect swimming pool water temperature. Refer to 10.10.
2. When swimming pool is available Optional Output signal need be configured as function of [3WV SWP] to drive 3-way valve for the swimming pool.
3. Optional Output signal can be configured as function of [SWP signal] to drive relay of SWP pump. Refer to 10.10.

10.4.1 SWP setting temperature

The operation of this function should be done through the master controller interface of SWP.

Mark	Description	Default Value	Range	Steps	Units
Tswps	SWP setting temperature		24-33	1	°C

10.4.2 SWP Demand ON/OFF and capacity control

There are 2 ways to demand SWP operation:

(1) SWP operation is demanded by request of SWP temperature (the difference of SWP setting temperature and current SWP temperature.

- SWP operation will start if:
  Current SWP temperature[Tswp] is lower than SWP setting temperature[Tswps] -1ºC
- SWP operation will stop if:
  Current SWP temperature[Tswp] is higher than SWP setting temperature[Tswps] +2ºC

(2) SWP operation is demanded by request of Optional input signal of [Swimming pool Demand ON/OFF].

- SWP operation will start if:
  The corresponding input terminal of [Swimming pool Demand ON/OFF] is closed.
- SWP operation will stop if:
  The corresponding input terminal of [Swimming pool Demand ON/OFF] is open.

NOTE:

1. Optional input signal can be configured as function of [Swimming pool Demand ON/OFF] to operate SWP. Refer to 10.10.1.
2. When Optional input signal is be configured as function of [Swimming pool Demand ON/OFF], SWP operation is demanded by request of Optional input signal of [Swimming pool Demand ON/OFF] instead of by request of SWP temperature.

When SWP operation is demanded ON the heat pump will be operated to achieve the Target outlet water temperature of SWP to heat up SWP water.

Target outlet water temperature of SWP =Current SWP temperature+ Offset Temperature [Tswpos].

The configuration of this option should be done through the master controller.

Configuration →Swimming Pool

Mark	Description	Default Value	Range	Steps	Units
Tswpos	Offset Temperature	30	15-40	1	°C

10.5 Auxiliary electric heater

Auxiliary electric heater (AEH) is used as additional heating capacity during cold outdoor temperature. The electrical heater can also be used for emergency operation in case of outdoor unit malfunction.

For Split unit Auxiliary electric heater is factory-delivered. It is 3-step heater with capacity of 1kW/2kW/3kW.

For Monobloc unit is on-site accessory. It offers 3-step heater connection with max. capacity of 3kW.

Steps	Split capacity	Monobloc capacity	Output Terminal
1	1kW (factory-delivered)	-	Terminal1
2	2kW (factory-delivered)	on-site accessory max. capacity of 3kW	Terminal2
3	3kW (factory-delivered)	on-site accessory max. capacity of 3kW	Terminal1+ Terminal2

NOTE:

For Monobloc unit The power supply of Auxiliary electric heater and build-in Safety thermostat of Auxiliary electric heater connection refers to electrical diagram and installation manual. Max capacity of heater is 3kW.

Auxiliary electric heater can offer additional heating capacity during space heating operation / SWP operation / defrosting depending on setting. It will always be disabled in any other mode (DHW, and Cooling mode).

Auxiliary electric Heater will only operate when Auxiliary electric Heater is selected as heat source ([Heating Source] is set to [HP + Heater] or [HP + Heater + Boiler]) . In the case of [HP only] or [Heater + Boiler] it will never operate.

The configuration of this option should be done through the master controller.

Configuration →Complementary Heating →Heating Source

Mark	Description	Default Value	Range	Steps	Units
HS	Heating Source	Only HP	HP only / HP + Heater / HP + Boiler / HP + Heater + Boiler	—	—

10.5.1 PI control method

The desired heating supplied by Auxiliary electric Heater is determined by the Load factor, which is calculated by a P+I function ranging from 0 to 100%. Actual heater output will be translated from percentage to a 3 step output using hysteresis system.

(1) Heater Target temperature

Heater operation is controlled by the heater target temperature.

(2) Heater load factor

Load Factor determines the desired heating supplied by heater. Load factor is calculated by a P+I function ranging from 0 to 100%.

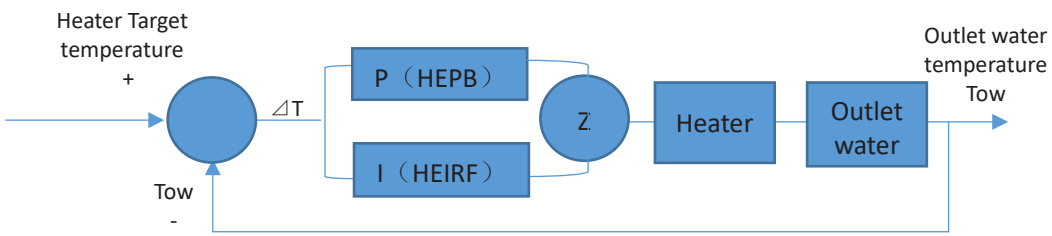

Where:
HEPB: Proportional band of electric heater.
HEIRF: Integral reset factor of electric heater.

The configuration of this option should be done through the master controller.

Configuration →Complementary Heating →Electrical Heater.

Mark	Description	Default Value	Range	Steps	Units
HEPB	Proportion Factor	2.0	0-20	0.2	%/°C
HEIRF	Integral Factor	1.0	0-20	0.1	%/°C.min
ISWT	Minimum time of steps	5	0-10	1	min
TDHWS_Anti_Legionella	Setting temperature	A	40~A*	5	°C

(3) Actual heater output will be translated from percentage to a 3 step output using hysteresis system.

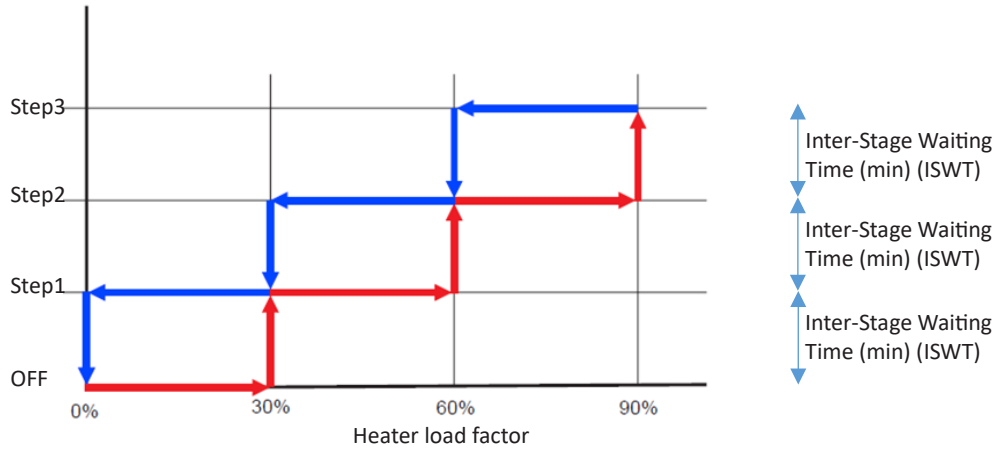

Step increase conditions

Step increases from 0 (heater OFF) to 1 when Load factor is higher than 30%

Step increases from 1 to 2 when Load factor is higher than 60%

Step increases from 2 to 3 when Load factor is higher than 90%

Step decrease conditions

Step decreases from 3 to 2 when Load factor is lower than 60%

Step decreases from 2 to 1 when Load factor is lower than 30%

Step decreases from 1 to 0 (heater OFF) when Load factor is 0%

Normal operation will require a maximum increase or decrease of 1 step.

(4) Heater inter-stage steps control.

After each step changes, further step changes are prohibited during the Inter-Stage Waiting Time (min) (ISWT) to avoid hunting.

10.5.2 Heater Operation during space heating

NOTE:

Auxiliary Electric Heater can be forced off if DSW4-7: ON. Forcing off Auxiliary electric heater by DSW4-7:ON is invalid when space heating Emergency operation (referring to 10.1.3.2) . The heater is forced off factory setting. Set DSW4 PIN7: OFF to cancel forcing off through the Dip switch on PCB1.

The configuration of this option should be done through the master controller.

Configuration →Complementary Heating →Electrical Heater

Mark	Description	Default Value	Range	Steps	Units
Hdif	Supply Setting Compensation	4	0~20	1	°C
EHb	Bivalent Point	0	-20~20	1	°C
WTEH	Waiting time	30	5□90	5	min

(1) Heater will only be enabled when Average Outdoor Ambient Temperature < [Bivalent Point]. The decision as to how to operate will be made considering ambient temperature.

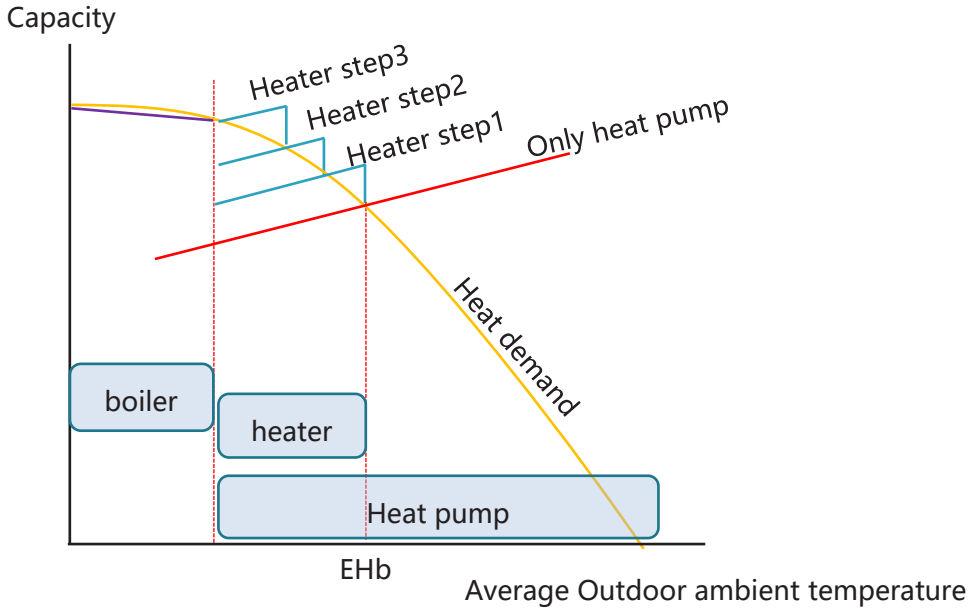

(2) Electric Heater is only allowed to operate when more than [Waiting Time] has passed since Heat Pump started.

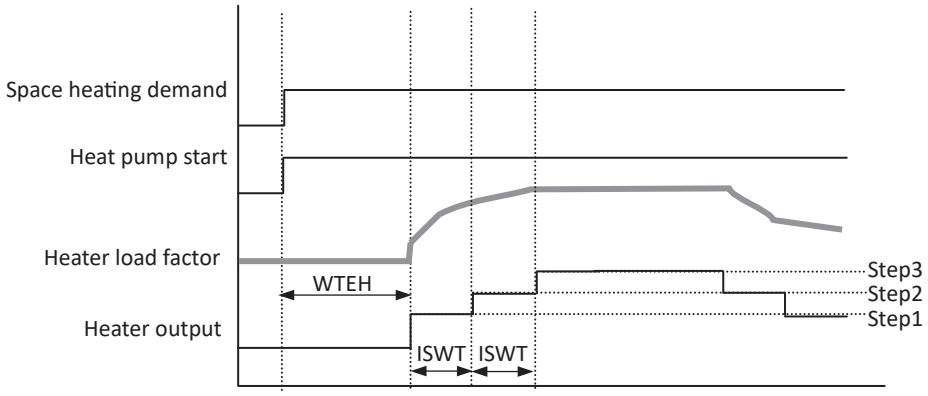

(3) Heater Target temperature.

Heater Target temperature=Maximum value of Target outlet water temperature- [Hdif] °C

Maximum value of Target outlet water temperature refer to 10.2.2.3.

(4) Heater load factor and Actual heater output refer to 10.5.1.

(5) Heater Operation during space heating Emergency operation.

Heater Operation during Emergency operation (referring to 10.1.3.2) as following:

① Forcing off Auxiliary electric heater by DSW4-7:ON is invalid when space heating Emergency operation.

② Auxiliary Electric Heater will operate with Heater Target temperature equalling Maximum value of Target outlet water temperature and without requirement of [Bivalent Point] & [Waiting Time] to offer immediate heating capacity during Emergency operation.

10.5.3 Initial Start-up at Low outdoor ambient temperatures.

During commissioning and when water temperature is very low, it is important for water to be heated gradually. In those conditions, additional function should be used for starting at low water temperature conditions:

Space Heating at lower water temperatures (lower than 15°C) and lower outdoor ambient temperatures (lower than 7ºC) can damage the heat pump when defrosting.

As a result, heating up to 15ºC when outdoor temperature is lower than 7ºC is performed by the Auxiliary Electrical Heater.

NOTE:

1. Forcing off Auxiliary electric heater by DSW4-7:ON is invalid when Initial Start-up at Low outdoor ambient temperatures.
2. This function is only valid when Auxiliary electric Heater is selected as heat source ([Heating Source] is set to [HP + Heater] or [HP + Heater + Boiler]) .

10.5.4 Heater Operation during SWP

NOTE:

Auxiliary Electric Heater can be forced off if DSW4-7:ON. Forcing off Auxiliary electric heater by DSW4-7:ON is invalid when SWP Emergency operation (referring to 10.1.3.2) . The heater is forced off factory setting. Set DSW4-7: OFF to cancel forcing off through the Dip switch on PCB1.

The configuration of this option should be done through the master controller.

Configuration →Complementary Heating →Electrical Heater

Mark	Description	Default Value	Range	Steps	Units
SWP_EH1	Swimming Pool by Electrical Heater	Disabled	Disabled / Enabled		

(1) Heater will only be enabled when all following conditions meet.

① [SWP_EH1] set as Enabled.

② Average Outdoor Ambient Temperature > Heat pump upper heating operation range (38°C-40°C) , that is out of heat pump heating operation range.

(2) Heater Target temperature

Heater Target temperature= Target outlet water temperature of SWP- [Hdif] °C

Target outlet water temperature of SWP refer to 10.4.2.

(3) Heater load factor and Actual heater output refer to 10.5.1.

(4) Heater Operation during SWP Emergency operation.

Heater Operation during Emergency operation (referring to 10.1.3.2) as following:

① Forcing off Auxiliary electric heater by DSW4-7:ON is invalid when SWP Emergency operation.

② Auxiliary Electric Heater will operate with Heater Target temperature equaling Target outlet water temperature of SWP and without requirement of Average Outdoor Ambient Temperature range to offer immediate heating capacity during Emergency operation.

③ Heater will only be enabled during Emergency operation when [SWP_EH1] set as Enabled.

10.5.5 Heater Operation during defrosting

NOTE:
Forcing off Auxiliary electric heater by DSW4-7:ON is invalid when defrosting.

The configuration of this option should be done through the master controller.

Configuration →Auxiliary Function →Defrost

Mark	Description	Default Value	Range	Steps	Units
Defrost_EH1	Defrost by Electrical heater	Disabled	Disabled /Enabled	-	-

(1) Actual heater output will be step 3 during defrosting when all following conditions meet

① [Defrost by Electircal heater] set as Enabled.

② Measured inlet water temperature [Tiw] < 25°C.

10.6 Boiler combination

Boiler can be used as additional heating capacity or replacement heating capacity during cold outdoor temperatures. Boiler can also be used for emergency operation in case of outdoor unit malfunction. Boiler can offer additional heating capacity during space heating / DHW / swimming pool depending on setting.

Boiler and Heater can never work at the same time. The decision as to how to operate is based on ambient temperature and heat source selection as below.

Boiler will only operate when Boiler is selected as heat source ([Heating Source] is set to [HP + Boiler] or [HP + Heater + Boiler]).

The configuration of this option should be done through the master controller.

Configuration →Complementary Heating →Heating Source

Mark	Description	Default Value	Range	Steps	Units
Defrost_EH1	Defrost by Electrical heater	Disabled	Disabled /Enabled	-	-

NOTE:

1. Hydraulic separator and water sensor [Tow3] must be available to use boiler (referring to 10.2.5).
2. Optional Output signal can be configured as function of [boiler combination] and be used to activate boiler with the dry contact (referring to10.10.2) .
3. Hot water temperature detection sensor [Tow3] of the hydraulic separator must avoid to be installed too closely to the outlet pipe of boiler.
4. Keep distance between outlet pipe of boiler and outlet pipe of the hydraulic separator.

10.6.1 PI control method

The desired heating supplied by Boiler is determined by the Load factor, which is calculated by a P+I function ranging from 0 to 100%. Actual Boiler output will be translated from percentage to ON/OFF output.

(1) Boiler Target temperature

Boiler operation is controlled by the Boiler target temperature.

(2) Boiler load factor

Load Factor determines the desired heating supplied by Boiler. Load factor is calculated by a P+I function ranging from 0 to 100%.

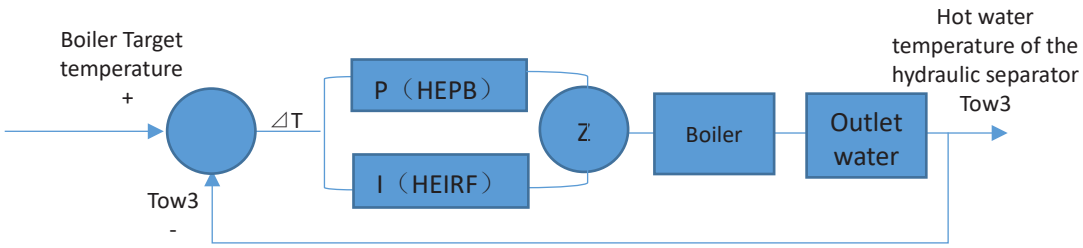

Where:

HEPB: Proportional band of Boiler.

HEIRF: Integral reset factor of Boiler.

The configuration of this option should be done through the master controller.

Configuration →Complementary Heating →Electrical Heater

Mark	Description	Default Value	Range	Steps	Units
HEPB	Proportion Factor	2.0	0-20	0.2	%/°C
HEIRF	Integral Factor	1.0	0-20	0.1	%/°C.min

NOTE:

[HEPB] and [HEIRF] use the same parameters as Electrical Heater (referring to 10.5.1) .

(3) Actual Boiler output will be translated from percentage to a ON/OFF output using hysteresis system.

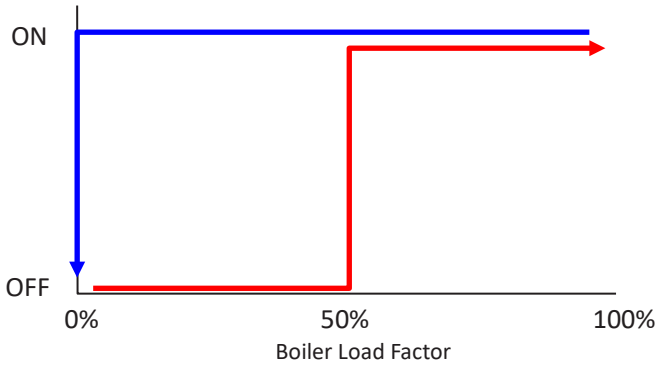

- Boiler ON conditions

  Load factor is higher than 50% and Hot water temperature [Tow3] of the hydraulic separator less than Boiler Target temperature -1°C.

- Boiler OFF conditions

  Load factor is 0% or Hot water temperature [Tow3] of the hydraulic separator more than Boiler Target +4 °C.

10.6.2 Boiler Operation during space heating

The configuration of this option should be done through the master controller.

Configuration →Complementary Heating →Boiler

Mark	Description	Default Value	Range	Steps	Units
B_mode	Combination mode	Parallel	Parallel/Alternative	_	_
BB	Bivalent Point	-10	-20~20	1	°C
kscob	Supply Setting Offset	4	0~10	1	°C
WTBO	Waiting Time	30	5~90	5	min

(1) Boiler will only be enabled when Average Outdoor Ambient Temperature < [Bivalent Point]. The decision as to how to operate will be made considering ambient temperature.

(2) Boiler can work on 2 different modes: [Parallel] and [Alternative].

- [Parallel]

Boiler works as complementary source and Boiler / heat pump work together to supply heat during cold outdoor temperatures.

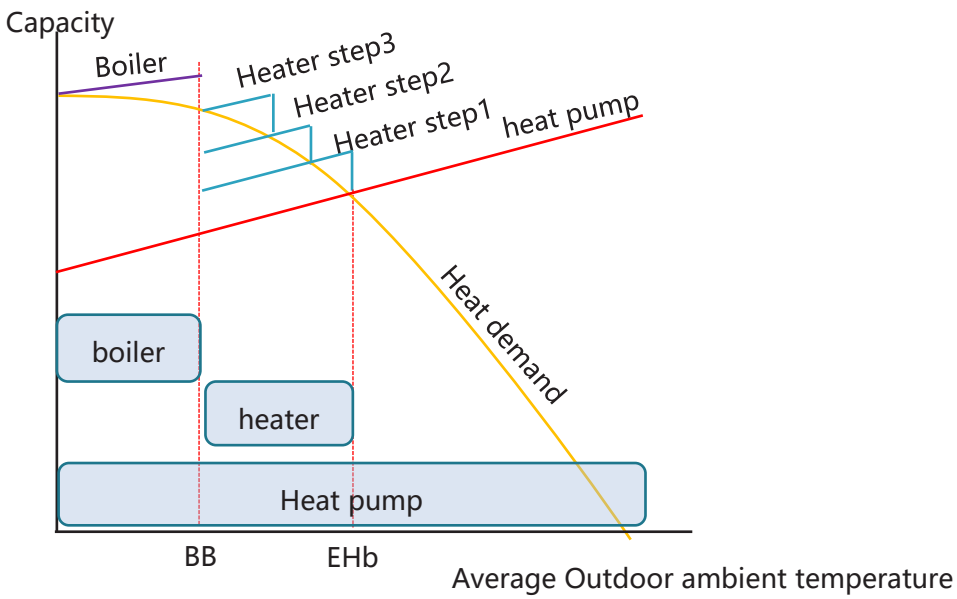

- [Alternative]
  Boiler works as replacement source and heat pump stop working due to low efficiency during cold outdoor temperatures. Boiler supplies all heat capacity.

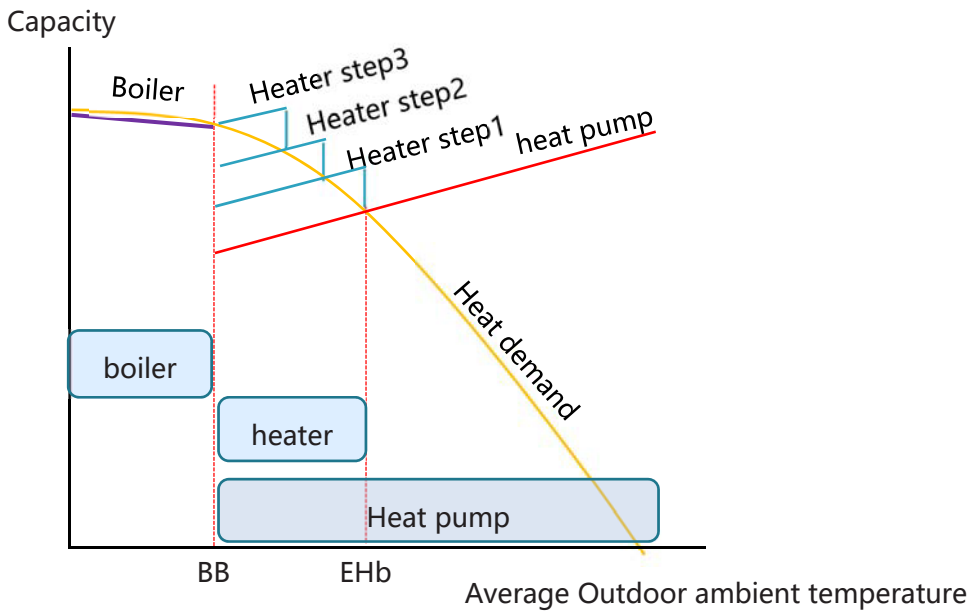

(3) Boiler is only allowed to operate when more than [Waiting Time] has passed since Heat Pump starts.

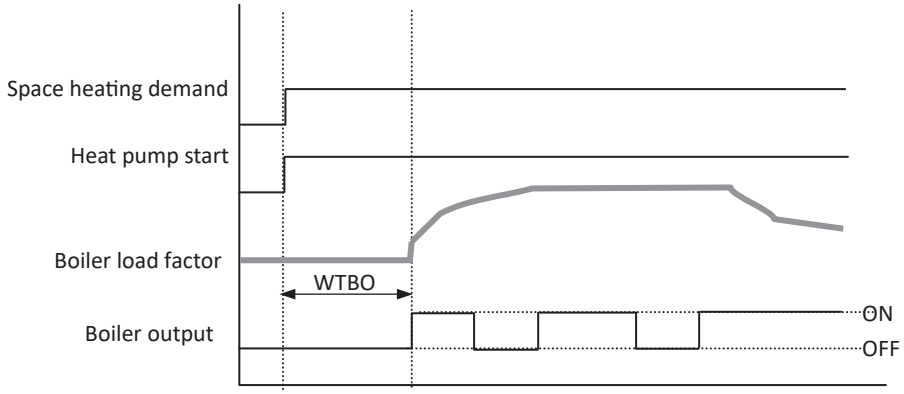

NOTE:

1. [Waiting Time] is only available when Boiler working modes set as [Parallel].
2. DO NOT set boiler outlet water temperature too high that will make boiler start and stop frequently.

(4) Boiler Target temperature

- Boiler working mode set as [Parallel]
  Boiler Target temperature=Maximum value of Target outlet water temperature- [kscob] °C
- Boiler working mode set as [Alternative]
  Boiler Target temperature=Maximum value of Target outlet water temperature °C
  Maximum value of Target outlet water temperature, refer to 10.2.2.3.

(5) Boiler actual output refers to 10.6.1.

(6) Boiler Operation during special operation

Boiler Operation during space heating Emergency operation (referring to 10.1.3.2) , HP Block operation (referring to10.9.5), and Initial Start-up at Low outdoor ambient temperatures (referring to 10.5.3) as following:

Boiler will work on mode of [Alternative] without requirement of [Bivalent Point] to offer immediate heating capacity.

10.6.3 Boiler Operation during DHW

The configuration of this option should be done through the master controller.

Configuration →Complementary Heating →Boiler

Mark	Description	Default Value	Range	Steps	Units
DHW_B	DHW by Bolier	Disabled	Disabled / Enabled		

It is possible to use boiler to heat up DHW when [DHW_B] set as [Enabled].

(1) Boiler will only be enabled when Average Outdoor Ambient Temperature < [Bivalent Point]. The decision as to how to operate will be made considering ambient temperature.

[Bivalent Point] refers to 10.6.2.

(2) Boiler can work on 2 different modes: [Parallel] and [Alternative].

[Parallel] and [Alternative] refers to 10.6.2.

- [Parallel]

Boiler works as complementary source and Boiler / heat pump work together to heat up DHW during cold outdoor temperatures.

NOTE:
Boiler is allowed to work on mode of [Parallel] only when DHW Electric Heater is inactivated ([DHW_hts] set as [Disabled] , referring to 10.3.3) .

- [Alternative]

Boiler works as replacement source and heat pump stop working due to low efficiency during cold outdoor temperatures. Boiler supplies all heat capacity.

NOTE:
Boiler works without requirement of [DHW_B] when work mode set as [Alternative].

(3) Boiler is only allowed to operate when more than [Waiting Time] has passed since Heat Pump starts.

[Waiting Time] refers to 10.6.2.

[Waiting Time] refers to 10.6.2.

NOTE:
1. [Waiting Time] is only available when Boiler working modes set as [Parallel].
2. DO NOT set boiler outlet water temperature too high that will make boiler start and stop frequently.

(4) Boiler Target temperature.

- Boiler working mode set as [Parallel]

Boiler Target temperature equals [Tmax].

[Tmax] refers to 10.2.2.3.

- Boiler working mode set as [Alternative]

Boiler Target temperature varies 60-65 °C.

(5) Boiler actual output refers to 10.6.1.

(6) Boiler Operation during special operation.

Boiler Operation during DHW Emergency operation (referring to 10.1.3.2) , HP Block operation (referring to10.9.5) , and high outdoor ambient temperature as following:

Boiler will work on mode of [Alternative] without requirement of [Bivalent Point] to offer immediate heating capacity.

NOTE:

1. DHW Electric Heater has priority to supply DHW heating during special operation (6).
2. Boiler is allowed to work during DHW Emergency operation only when DHW Electric Heater is inactivated ([DHW_hts] set as [Disabled] , referring to 10.3.3) or DHW Electric Heater is inactivated during DHW Emergency operation ([Emergency_DHW] set as [Disabled] , referring to 10.1.3.2.) .
3. Boiler works during DHW Emergency operation without requirement of [DHW_B].
4. Boiler works When average outdoor ambient temperature is more than 38°C-40°C , that is out of heat pump heating operation range , and DHW Electric Heater is inactivated ([DHW_hts] set as [Disabled] , referring to 10.3.3) .

(7) Boiler Operation during Space cooling.

It is possible to operate Space cooling (heat pump and WP1) and DHW (WP3 or boiler) simultaneously when hydraulic separator is available (refer to 10.2.5) and [DSW5-2] set as [OFF], in this situation cooling water circulation will not pass through hydraulic separator.

Boiler can works to meet DHW demand When average outdoor ambient temperature is more than 38°C-40°C , that is out of heat pump heating operation range , and DHW Electric Heater is inactivated ([DHW_hts] set as [Disabled] , referring to 10.3.3) .

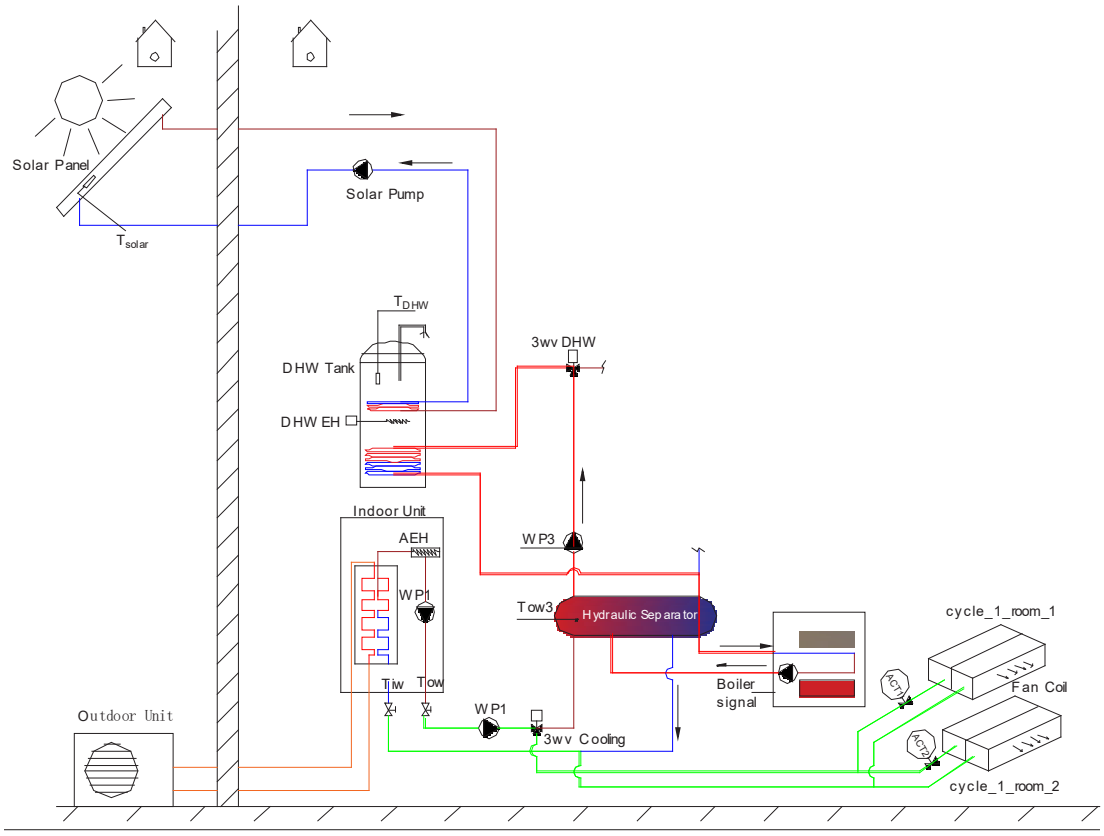

- Boiler ON conditions

Water temperature in the tank [TDHW] is less than [TDHWS]- [DHW_ht_diff] □ and Hot water temperature [Tow3] of the hydraulic separator is less than Boiler Target temperature -5°C.

[DHW_ht_diff] refers to 10.3.3.

- Boiler OFF conditions

[TDHW] is higher than [TDHWS] or [Tow3] is higher than Boiler Target +5 °C.

10.6.4 Boiler Operation during SWP

The configuration of this option should be done through the master controller.

Configuration →Complementary Heating →Boiler

Mark	Description	Default Value	Range	Steps	Units
SWP_B	Swimming Pool by Bolier	Disabled	Disabled / Enabled		

It is possible to use boiler to heat up SWP when [SWP_B] set as [Enabled].

(1) Boiler will only be enabled when average outdoor ambient temperature is more than 38°C-40°C , that is out of heat pump heating operation range.

(2) Boiler Target temperature

Boiler Target temperature equals Target outlet water temperature of SWP- [kscob] °C.

Target outlet water temperature of SWP refers to 10.4.2.

(3) Boiler actual output refers to 10.6.1.

(4) Boiler Operation during special operation.

Boiler Operation during SWP Emergency operation (referring to 10.1.3.2) and HP Block operation (referring to10.9.5) as following.

Boiler will work to offer immediate heating capacity. And Boiler Target temperature varies 60-65°C.

10.7 Solar combination

The solar combination will enable to heat up domestic water by means of the sun whenever the sun is available. The solar panels gather heat from the sun. when it is ready, the solar pump begins operating in order to transfer the heat to the domestic hot water tank's heat exchanger.

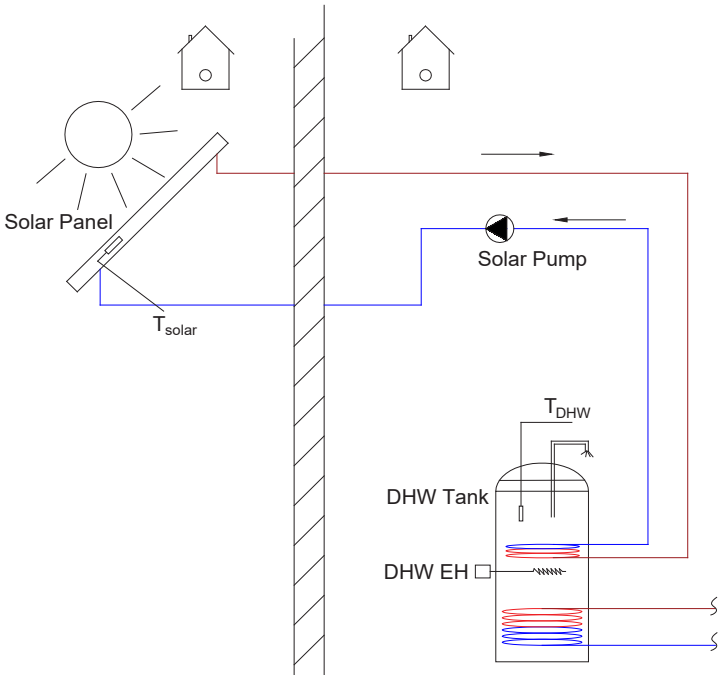

NOTE:

When solar combination is available Optional Output signal need be configured as function of [Solar out] to drive relay of the solar pump (referring to10.10.2) .

The configuration of this option should be done through the master controller.

Configuration →Complementary Heating →Solar

Mark	Description	Default Value	Range	Steps	Units
Solar_s	Status	Disabled	Disabled Input solar sensor	-	-
Solar_min_T	Solar Min. Time	5	5~240	5	min
Solar_max_T	Solar Max. Time	OFF	off, 35~240	5	min
Solar_ΔTDHW_c	ΔTDHW	3	1~10	1	°C
Solar_ΔT_c	ΔT connection	10	1~30	1	°C
Solar_ΔT_disc	ΔT disconnection	5	1~Solar_ΔT_c	1	°C
Tsolar_DHWS	DHW Max. Temp	60	30~90	1	°C
Tsolar_min	Panel Min. Temp	15	1~60	1	°C
Tsolar_overheat	Panel Overheat Temp	80	80~120	1	°C
Tsolar_antiFreezing	Panel antiFreezing Temp	4	-20~10	1	°C

10.7.1 Control function

There are 2 ways to trigger solar pump operation to transfer the heat to the domestic hot water tank's heat exchanger.

(1) [Solar_s] set as [Input]

Trigger solar pump operation to transfer the heat to the domestic hot water tank's heat exchanger by input signal of [Solar in].

- Solar pump ON when all of the following conditions are met.

① Time of [Solar_min_T] has passed since Solar pump OFF.
② Water temperature in the domestic hot water tank [TDHW] less than [Tsolar_DHWS]- [Solar_ΔTDHW_c] °C.
③ Input signal of [Solar in] is closed.

- Solar pump OFF when any of the following conditions is fulfilled.

① Time of [Solar_max_T] has passed since Solar pump ON if [Solar_max_T] is not set as [OFF].
② [TDHW] is higher than [Tsolar_DHWS].
③ Input signal of [Solar in] is open.

NOTE:
When [Solar_s] set as [Input] Optional input signal need be configured as function of [Solar in]. Refer to 10.10.1.

(2) [Solar_s] set as [solar sensor]

Trigger solar pump operation to transfer the heat to the domestic hot water tank's heat exchanger by detecting hot water temperature of solar panels [Tsolar].

The solar panels gather heat from the sun. When detecting hot water temperature of solar panels [Tsolar] rises above the water temperature in the domestic hot water tank [TDHW], the solar pump operation to transfer the heat to the domestic hot water tank's heat exchanger.

- Solar pump ON when all of the following conditions are met.

① Time of [Solar_min_T] has passed since Solar pump OFF.
② [TDHW] less than [Tsolar_DHWS]- [Solar_ΔTDHW_c].
③ [Tsolar] is higher than [TDHW] +[Solar_ΔT_c].
④ [Tsolar] is higher than [Tsolar_min].

- Solar pump OFF when any of the following conditions is fulfilled.

① Time of [Solar_max_T] has passed since Solar pump ON if [Solar_max_T] is not set as [OFF].
② [TDHW] is higher than [Tsolar_DHWS].
③ [Tsolar] is less than [TDHW] +[Solar_ΔT_disc].
④ [Tsolar] is less than [Tsolar_min]-2 °C.

NOTE:

1. When [Solar_s] set as [solar sensor] Auxiliary sensor on PCB1 of indoor unit need be configured as function of [Tsolar] to detect hot water temperature of solar panels. Refer to 10.10.
2. Hot water temperature sensor of solar panels [Tsolar] should be installed whereabout to detect stable hot water temperature of solar panels.

10.7.2 Solar panels antiFreezing protection

The solar panels may be frozen in the winter. It is necessary to circulate hot water to the solar panels to prevent them from being frozen . when hot water temperature of solar panels [Tsolar] is too low , the solar pump begins operating in order to transfer the heat to the solar panels through heat exchanger.

- Solar pump ON when all of the following conditions are met.

① [Tsolar] is less than [Tsolar_antiFreezing]-2 °C.
② [TDHW] is higher than [Tsolar] +6 °C.

- Solar pump OFF when any of the following conditions is fulfilled.

① [Tsolar] is higher than [Tsolar_antiFreezing].
② [TDHW] is less than [Tsolar] +2 °C.

NOTE:
Overheat protection is available when [Solar_s] set as [solar sensor].

10.8 Water pump control

Depending on system configuration WP1/WP2/WP3 work in the water circulation as following.

Water pump	Description
WP1	This Water pump is present inside the unit. It is responsible of water recirculation between plate exchanger and hydraulic separator /installation. A extra WP1 can be cascaded with inside EC WP1 to offer additional hydraulic head. The extra WP1 works equally with inside EC WP1.
WP2	Water Pump used only in case a secondary Water Cycle for space heating or space cooling is used. It ensures water circulation at Water Cycle 2.
WP3	Water Pump used in case that an hydraulic separator is used. It ensures water circulation from hydraulic separator to the distribution circuit.

NOTE:

1. Optional Output signal can be configured as function of [WP1] and be used to drive relay of extra WP1 (referring to10.10.2) .
2. Optional Output signal can be configured as function of [WP2] and be used to drive relay of WP2. (referring to10.10.2) .
3. Optional Output signal can be configured as function of [WP3] and be used to drive relay of WP3. (referring to10.10.2) .

10.8.1 Water pump control during space heating/cooling

10.8.1.1 WP1/WP3 control

10.8.1.1.1 Hydraulic separator is Enabled

WP1 and WP3 need to work together to deliver water circulation When hydraulic separator is Enabled ([hsb] set as [Enabled]).

(1) [Off_mode(heating)] is set as [ON] (Space heating/cooling Thermo ON/OFF by request of water outlet temperature on Water Cycle 1 and Water Cycle 2).

Pumps control can be set to Standard or Economic mode. This configuration is set using DSW4 PIN5.

When PIN is OFF, pump is in Standard operation, pump is always in operation when space heating or cooling is enabled (Switch ON), so in case of disable space heating or cooling (Switch OFF), pump stops operation.

When PIN is ON, pump is in Economic operation. This allows the pump to work periodically when space heating or cooling is Thermo OFF (Demand OFF for space heating and cooling).

- When DSW4-5 is OFF, pump of WP1/WP3 is in Standard operation, water pump works as shown in the graphic below:

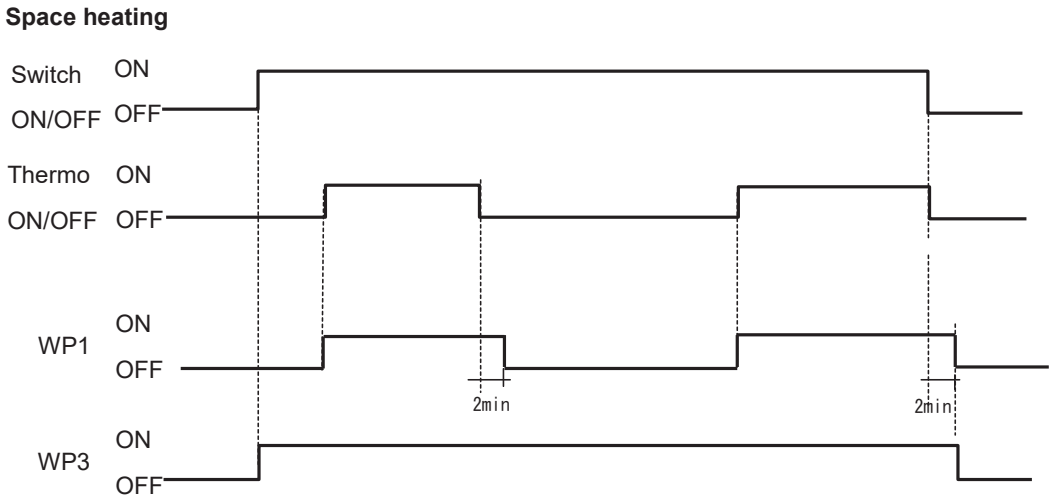

Space cooling

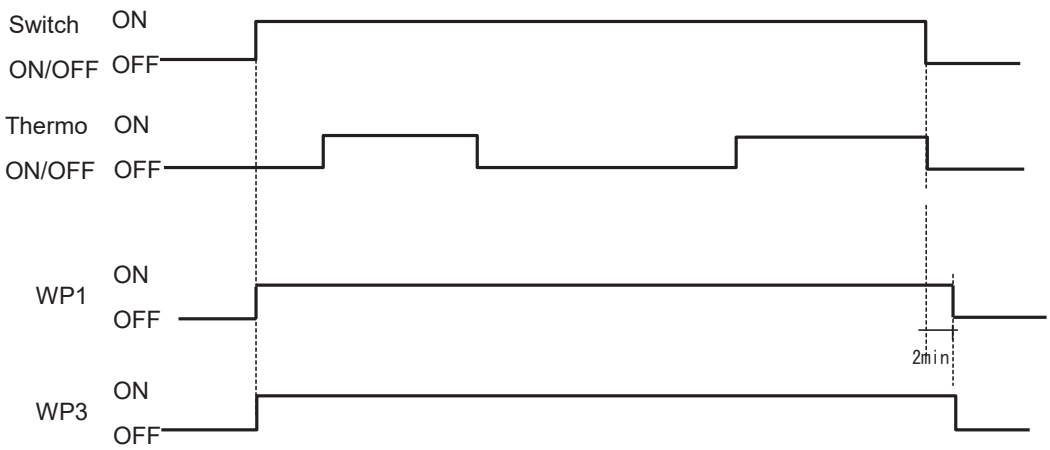

NOTE:

1. WP3 is always OFF during space cooling when DSW5-2 is OFF, in this situation cooling water circulation will not pass through hydraulic separator.

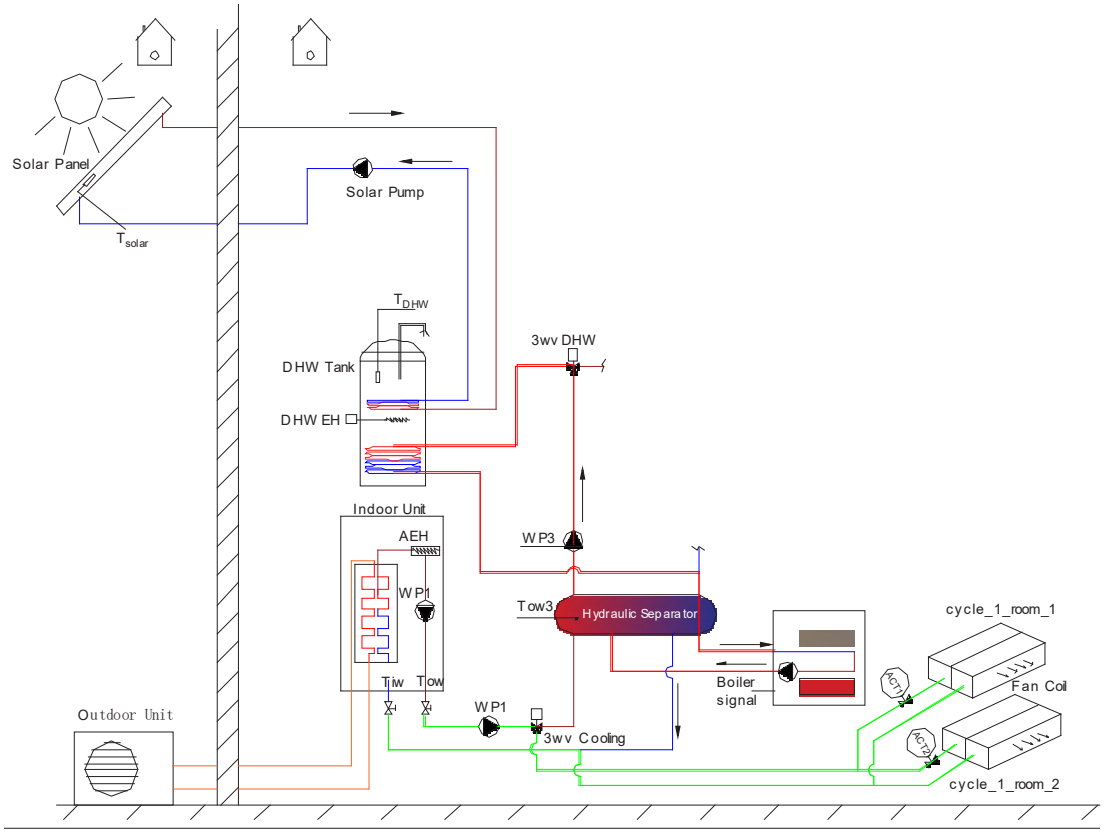

2. WP1 and WP3 has 2 minutes or more of overrun after requiring OFF depending on outlet water temperature.
3. WP1 is always OFF when Boiler works as replacement source and heat pump stop working in Emergency operation (referring to 10.1.3.2), HP Block operation (referring to10.9.5) or Boiler working mode of [Alternative] (referring to 10.6.) .

- When DSW4-5 is ON, pump of WP1/WP3 is in Economic mode, water pump works as shown in the graphic below:

Space heating

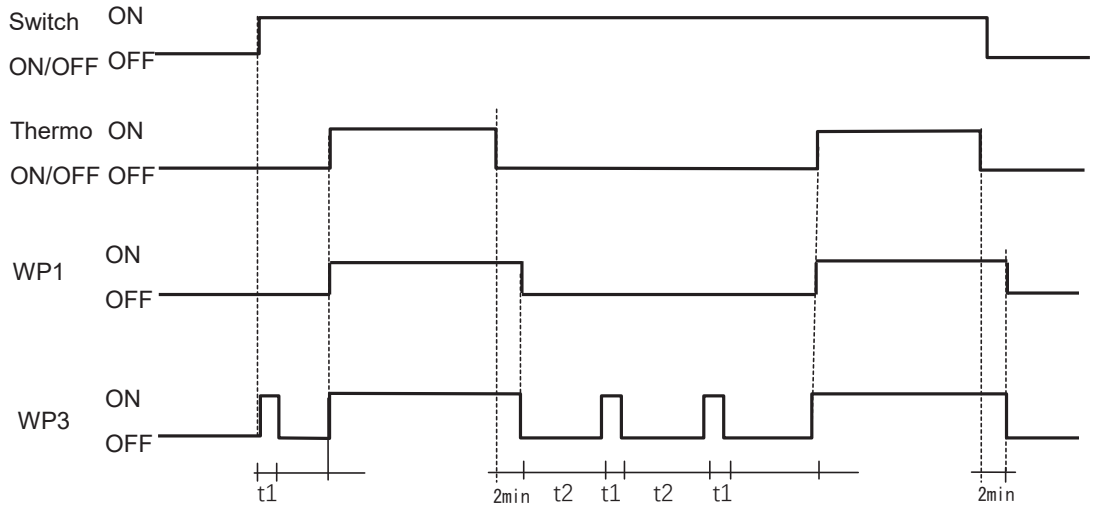

Space cooling

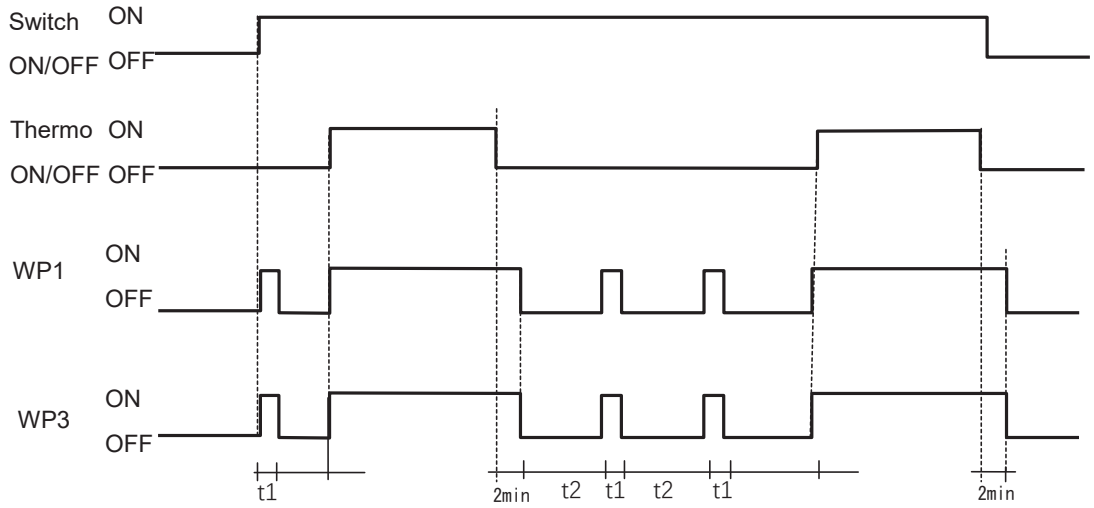

The configuration of this option should be done through the master controller.

Configuration →Heat pump→ Water pump configuration,

Mark	Description	Default Value	Range	Steps	Units
tPumpOFF	Min. ON Time	40	0-120	10	min
tPumpON	Min. OFF Time	10	0-20	2	min

t1= tPumpON

t2= tPumpOFF

NOTE:

1. WP3 is always OFF during space cooling when DSW5-2 is OFF, in this situation cooling water circulation will not pass through hydraulic separator.
2. WP1 and WP3 has 2 minutes or more of overrun after requiring OFF depending on outlet water temperature.
3. WP1 is always OFF when Boiler works as replacement source and heat pump stop working in Emergency operation (referring to 10.1.3.2), HP Block operation (referring to10.9.5) or Boiler working mode of [Alternative] (referring to 10.6.).

(2) [Off_mode(heating)] is set as [OFF] (Space heating/cooling Thermo ON/OFF by room thermostats)
Water pump of WP1/WP3 works as shown in the graphic below:

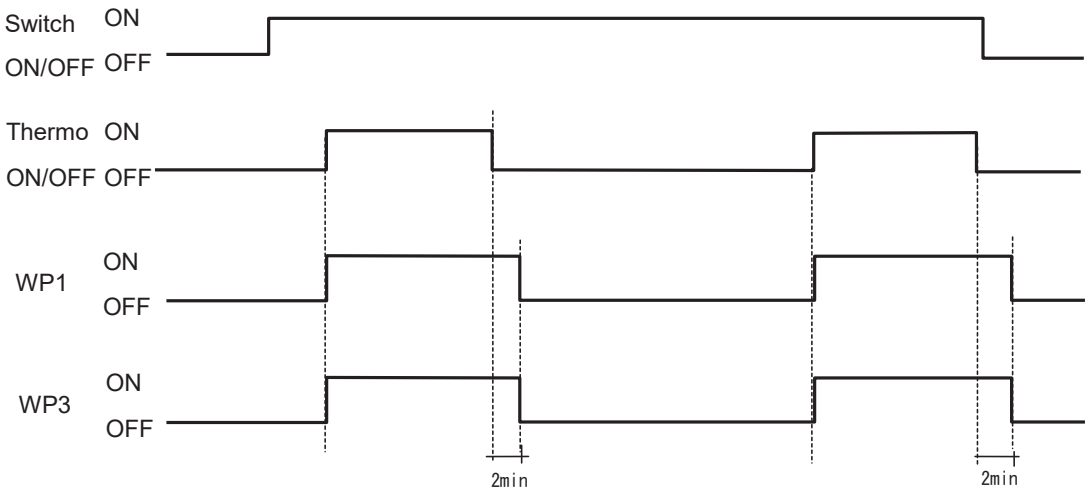

NOTE:

1. WP3 is always OFF during space cooling when DSW5-2 is OFF, in this situation cooling water circulation will not pass through hydraulic separator.
2. WP1 and WP3 has 2 minutes or more of overrun after requiring OFF depending on outlet water temperature.
3. WP1 is always OFF when Boiler works as replacement source and heat pump stop working in Emergency operation (referring to 10.1.3.2), HP Block operation (referring to10.9.5) or Boiler working mode of [Alternative] (referring to 10.6.).

10.8.1.1.2 Hydraulic separator is Disabled

Only WP1 work to deliver water circulation When hydraulic separator is Disabled ([hsb] set as [Disabled]).

(1) [Off_mode(heating)] is set as [ON] (Space heating/cooling Thermo ON/OFF by request of water outlet temperature on Water Cycle 1 and Water Cycle 2).

Pumps control can be set to Standard or Economic mode. This configuration is set using DSW4 PIN5.

When PIN is OFF, pump is in Standard operation, pump is always in operation when space heating or cooling is enabled (Switch ON), so in case of disable space heating or cooling (Switch OFF), pump stops operation.

When PIN is ON, pump is in Economic operation. This allows the pump to stop when space heating or cooling is Thermo OFF (Demand OFF for space heating and cooling).

- When DSW4-5 is OFF, WP1 is in Standard operation, water pump works as shown in the graphic below:

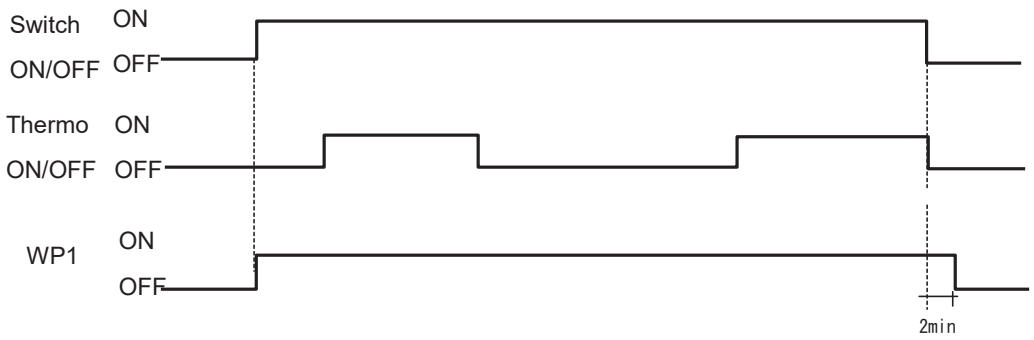

NOTE:
WP1 has 2 minutes or more of overrun after requiring OFF depending on outlet water temperature.

- When DSW4-5 is ON, WP1 is in Economic mode, water pump works as shown in the graphic below:

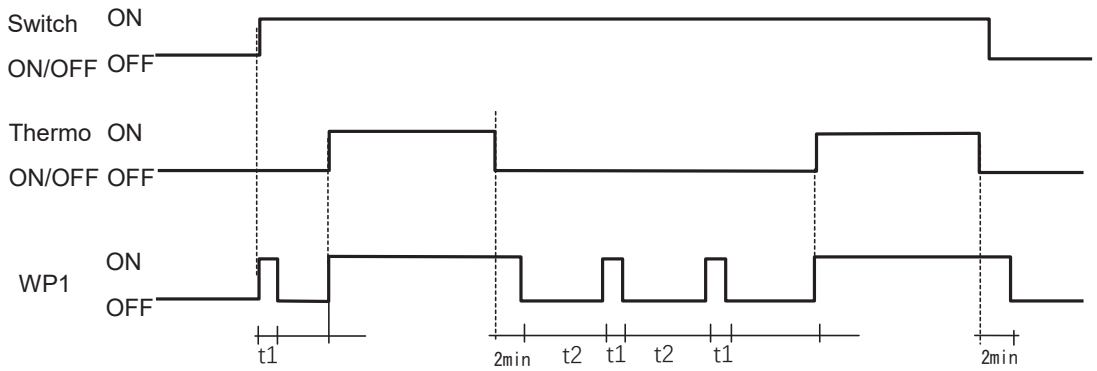

t1= tPumpON
t2= tPumpOFF

NOTE:
WP1 has 2 minutes or more of overrun after requiring OFF depending on outlet water temperature.

(2) [Off_mode(heating)] is set as [OFF] (Space heating/cooling Thermo ON/OFF by room thermostats)
WP1 works as shown in the graphic below:

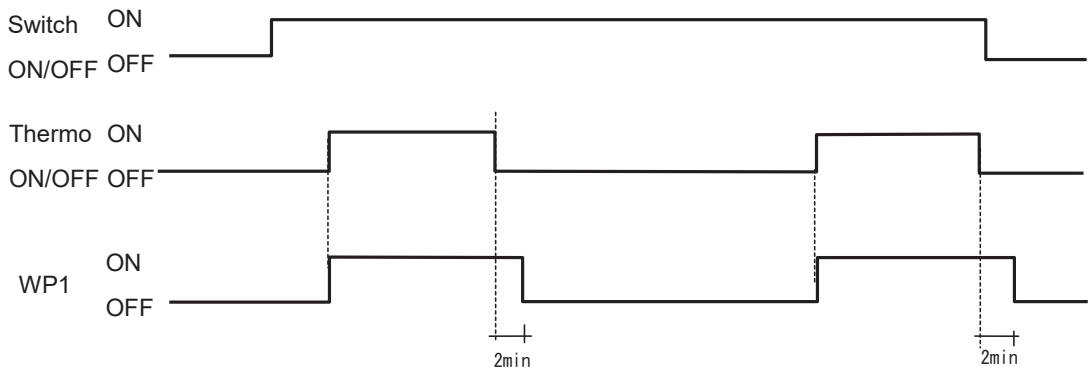

NOTE:
WP1 has 2 minutes or more of overrun after requiring OFF depending on outlet water temperature.

10.8.1.2 WP2 control

WP2 is used only in case a secondary Water Cycle for space heating or space cooling is used. It ensures water circulation at Water Cycle 2. The mixing station is controlled using the indoor unit by means of a mixing valve / additional pump (WP2)/ additional water sensor (Tow2).

The configuration of this option should be done through the master controller.

Configuration →Heat pump→Water pump configuration

Mark	Description	Default Value	Range	Steps	Units
Cool_WP2	Cooling operation for WP2	Disabled	Disabled / Enabled	-	-

(1) Any room thermostat is available on Water Cycle 2, then WP2 is demanded operation by room thermostats on Water Cycle 2.

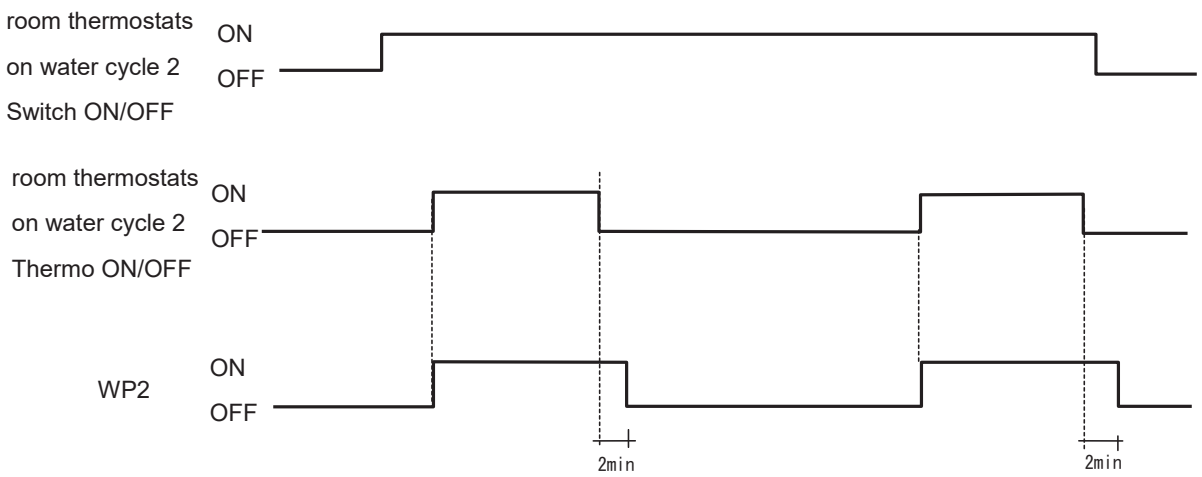

NOTE:

1. WP2 is always OFF during space cooling when [Cool_WP2] is [Disabled], in this situation cooling water circulation will not pass through Water Cycle 2.
2. WP2 has 2 minutes or more of overrun after requiring OFF depending on outlet water temperature.

(2) None room thermostat is available on Water Cycle 2, then WP2 is demanded operation by Water Cycle 2.

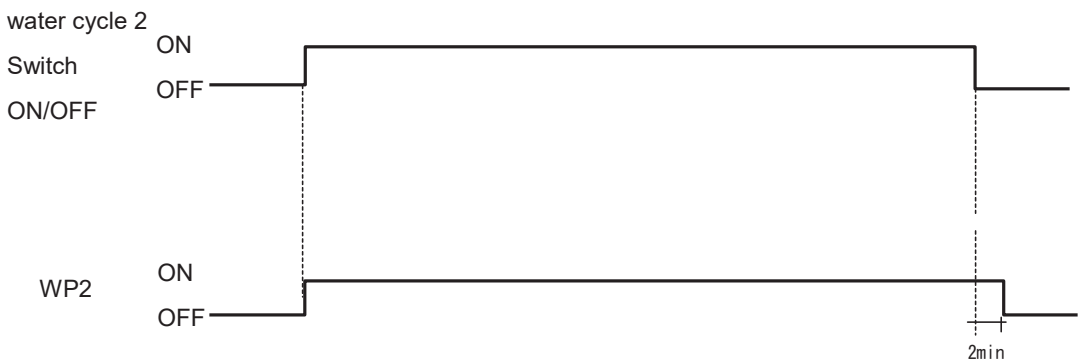

NOTE:

1. WP2 is always OFF during space cooling when [Cool_WP2] is [Disabled], in this situation cooling water circulation will not pass through Water Cycle 2.
2. WP2 has 2 minutes or more of overrun after requiring OFF depending on outlet water temperature.

10.8.2 Water pump control during DHW and SWP

10.8.2.1 Hydraulic separator is Enabled

WP1 and WP3 need to work together to deliver water circulation When hydraulic separator is Enabled ([hsb] set as [Enabled]).

Water pump of WP1/WP3 works as shown in the graphic below:

DHW operation

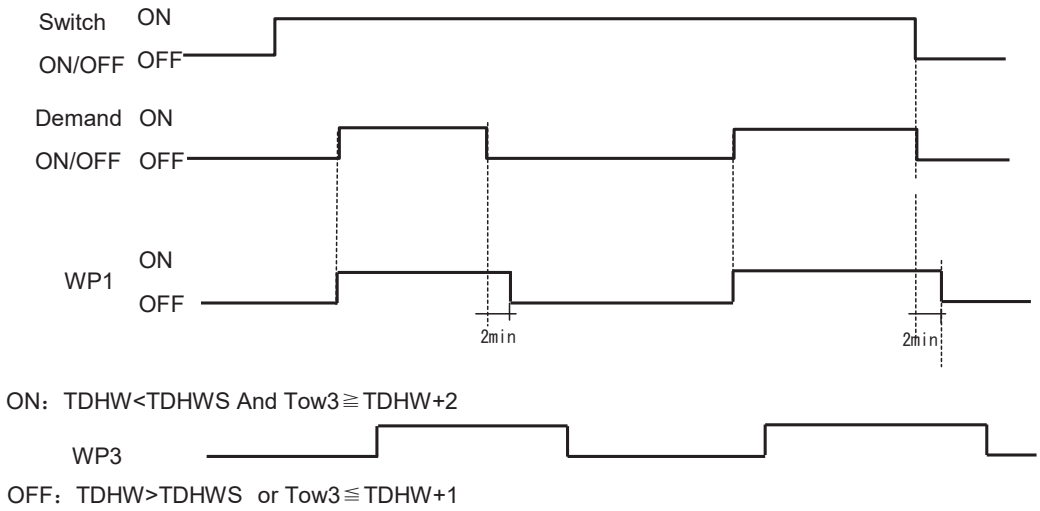

NOTE:

1. It is possible to operate Space cooling (heat pump and WP1)and DHW (WP3 or boiler)simultaneously when hydraulic separator is available (refer to 10.2.5)and [DSW5-2] set as [OFF], in this situation cooling water circulation will not pass through hydraulic separator. Boiler can works to meet DHW demand , refer to 10.6.3 (7). In this situation WP1 works in space cooling referring to 10.8.1.1.1. And WP3 works referring to DHW operation chart.

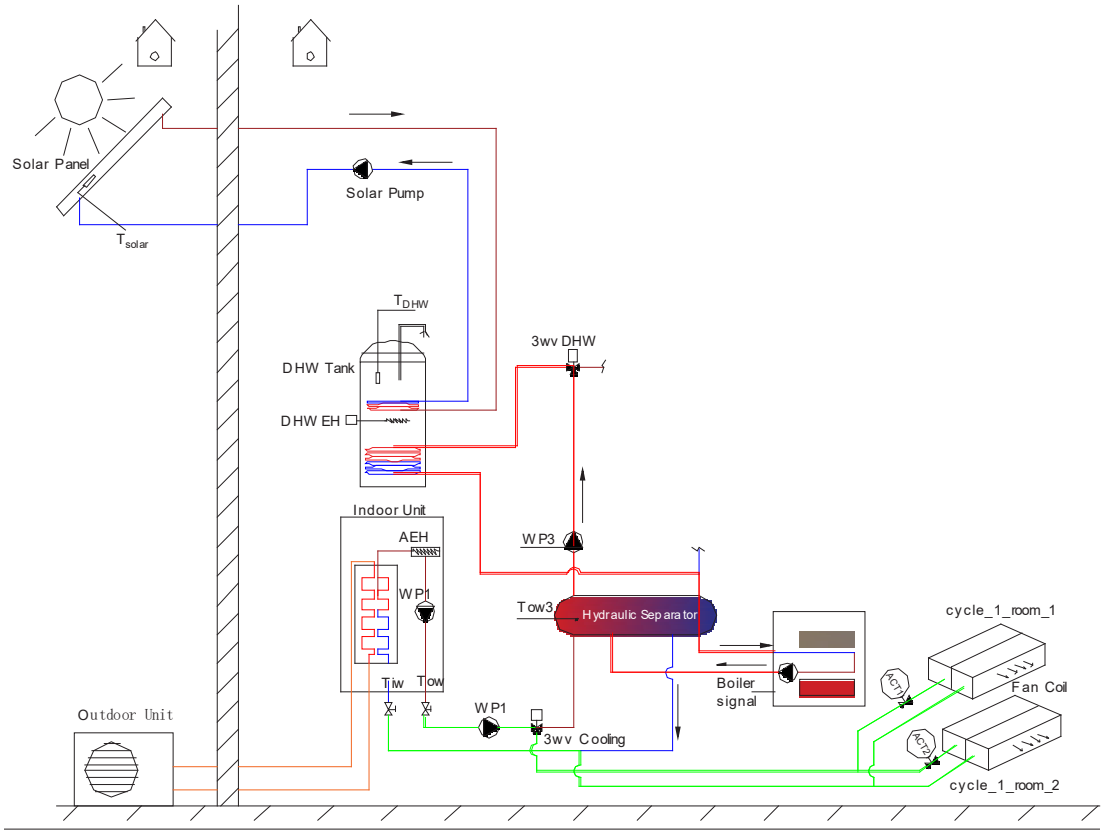

2. WP1 is always OFF when Boiler works as replacement source and heat pump stop working in Emergency operation (referring to 10.1.3.2), HP Block operation (referring to10.9.5) or Boiler working mode of [Alternative] (referring to 10.6.).

SWP operation

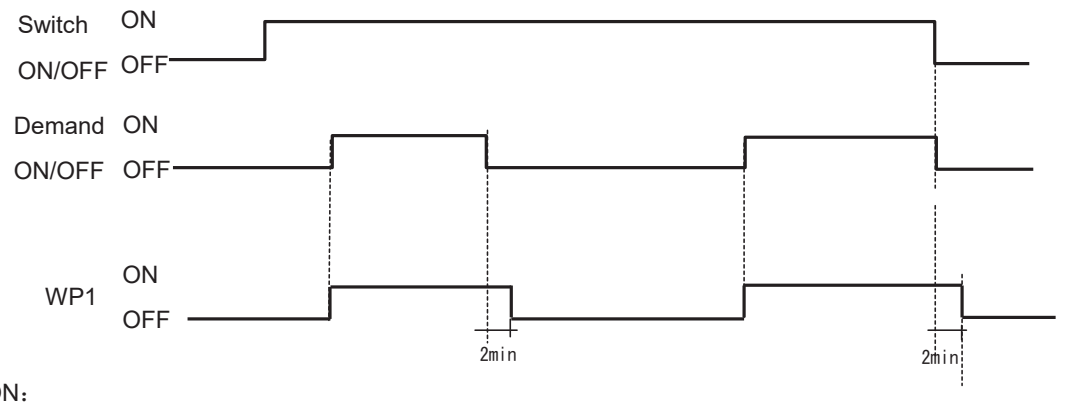

ON：

①Tswp<Tswps And Tow3≧Tswp +2

②Optional input terminal of [Swimming pool Demand ON/OFF] is closed.

OFF：

①Tswp > Tswps or Tow3≦Tswp +1

②Optional input terminal of [Swimming pool Demand ON/OFF] is open.

NOTE:

1. WP1 and WP3 has 2 minutes or more of overrun after requiring OFF depending on outlet water temperature.
2. WP1 is always OFF when Boiler works as replacement source and heat pump stop working in Emergency operation (referring to 10.1.3.2), HP Block operation (referring to10.9.5) or Boiler working mode of [Alternative] (referring to 10.6.).

10.8.2.2 Hydraulic separator is Disabled

Only WP1 work to deliver water circulation When hydraulic separator is Disabled ([hsb] set as [Disabled]).

WP1 works as shown in the graphic below:

DHW operation or SWP operation

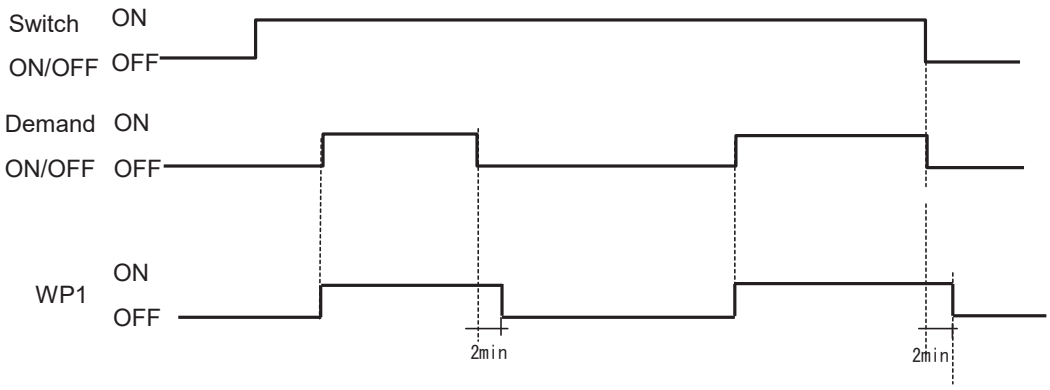

NOTE:

WP1 has 2 minutes or more of overrun after requiring OFF depending on outlet water temperature.

10.8.3 EC WP1 speed control

Inside EC WP1 can be controlled by PWM input signal (EC Water Pump).

The configuration of this option should be done through the master controller.

Configuration →Heat pump→Water pump configuration

Mark	Description	Default Value	Range	Steps	Units
Pump_mode	Operation Speed Mode	Fix	Fix/ΔT	1	°C
Space_speed	Space speed (heating and cooling)	100%	50-100%	5	%
DHW_speed	DHW speed	100%	50-100%	5	%
SWP_speed	SWP Speed	100%	50-100%	5	%

(1) Speed of Inside EC WP1 can be controlled by PWM input signal (EC Water Pump) in 2 optional modes:

- Fixed speed selected by installer when [Pump_mode] set as [Fix].
- Variable speed by Water Inlet and Water Outlet temperature when [Pump_mode] set as [ΔT].

NOTE:
Variable speed is valid only during space heating/cooling operation. DHW operation and SWP operation always works as Fixed speed.

(2) When EC WP1 works as [Fix] of [Pump_mode] , Fixed speed value of WP1_speed is set by [Space_speed] during space heating/cooling operation, [DHW_speed] during DHW operation and [SWP_speed] during SWP operation.

- PWM input signal

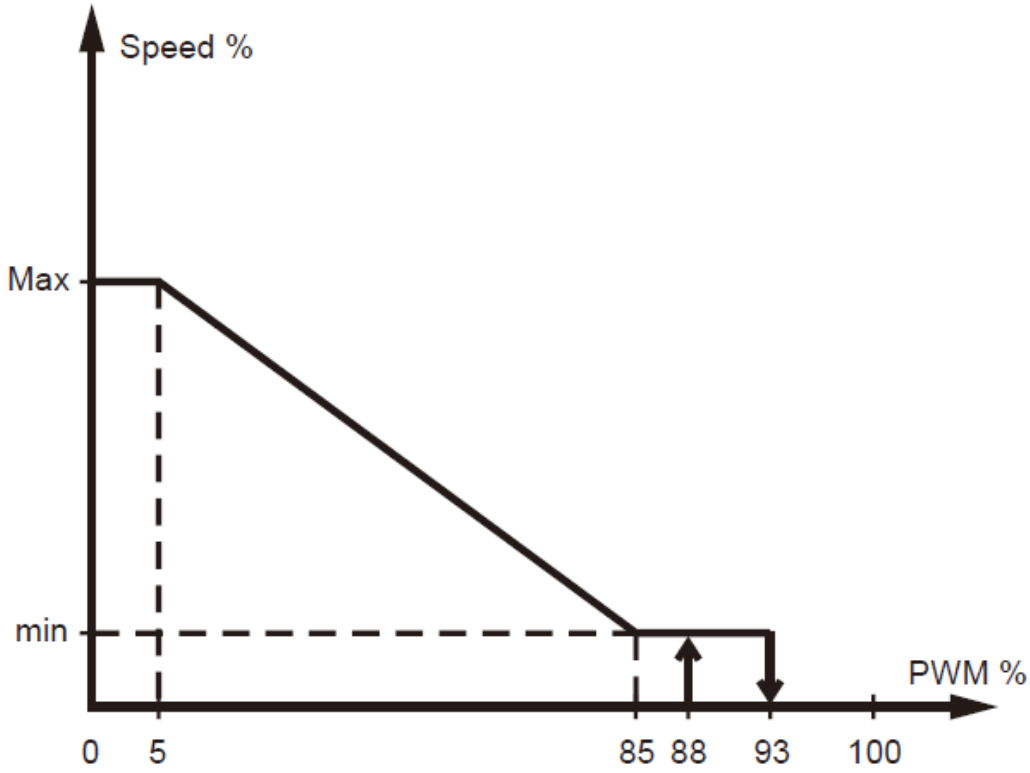

iPWM input signal (%) [n-P] in 7-segments	Pump Action
<5	The pump runs at maximum speed.
5 - 85	The pump speed decreases linearly from maximum to minimum.
85 - 93	The pump runs at minimum speed (Operation)
85 - 88	Pumps runs at minimum speed (start-up)
93 - 100	Standby.

- EC WP1 Hydraulic operational area with PWM input signal

EC WP1 of Split unit:

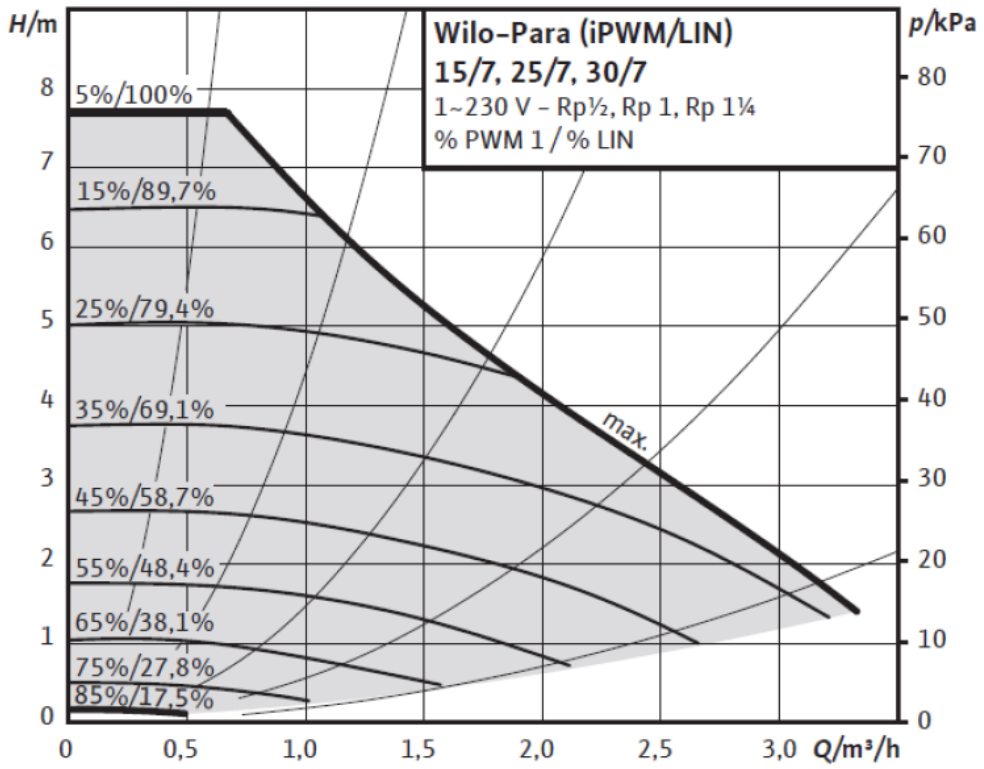

EC WP1 of monobloc unit:

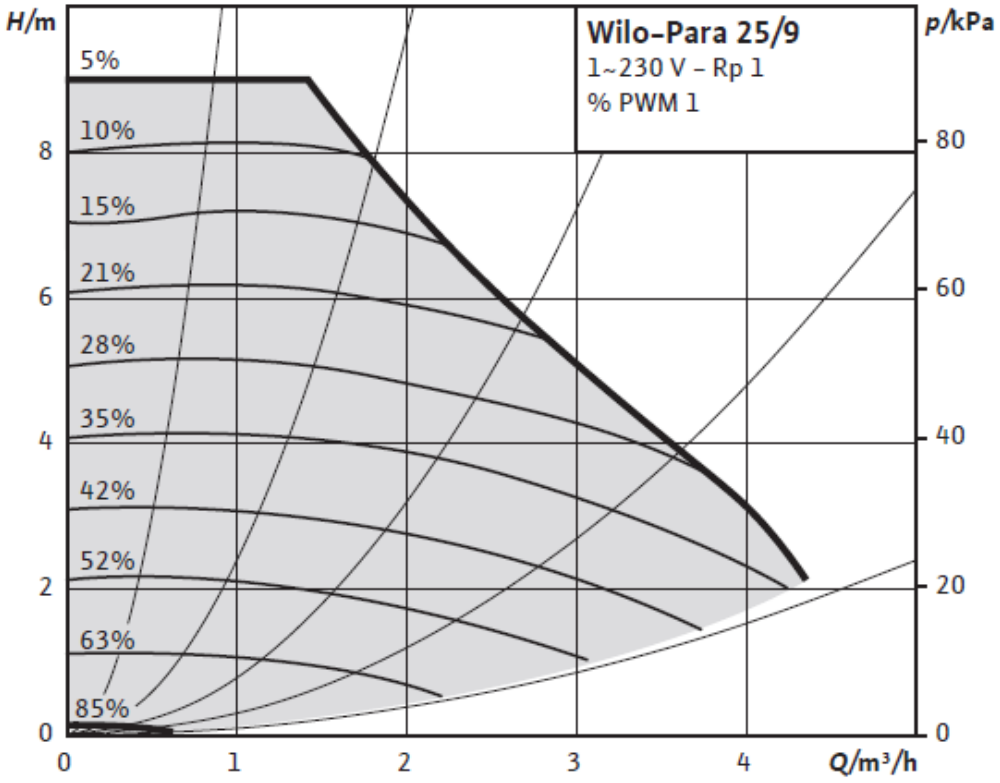

- Set Fixed speed value and PWM input signal

WP1_speed Space_speed DHW_speed SWP_speed %	model					
	(2.0HP)		(2.5HP)		(3.0HP)	
	iPWM_in %		iPWM_in %		iPWM_in %	
	space cooling	space heating	space cooling	space heating	space cooling	space heating
50	18	60	18	55	14	50
55	18	54	18	50	14	45
60	18	49	18	45	14	41
65	18	43	18	40	14	36
70	18	37	18	35	14	31
75	18	32	18	30	14	27
80	18	26	18	25	14	22
85	15	21	15	20	14	18
90	11	15	11	15	11	13
95	8	10	8	10	8	9
100	5	5	5	5	5	5

(3) When EC WP1 works as [ΔT] of [Pump_mode], Speed of WP1 is controlled by PWM input signal to achieve target value of Water Inlet and Water Outlet temperature difference.

- space heating operation
  5%≤iPWM_in (n) ≤18%

Maximum value of Target outlet water temperature (refer to 10.2.2.3)	Target value of Water Inlet and Water Outlet temperature difference
55- 60ºC	8 ºC
45 -55ºC	7 ºC
25-45ºC	5 ºC
less than 25ºC	3 ºC

- space heating operation
  5%≤iPWM_in (n) ≤60%
  Target value of Water Inlet and Water Outlet temperature difference sets as 5 ºC

10.8.4 EC WP1 Water flow feedback

Water flow can be feedbacked by PWM output signal of Inside EC WP1 to monitor and estimate capacity.

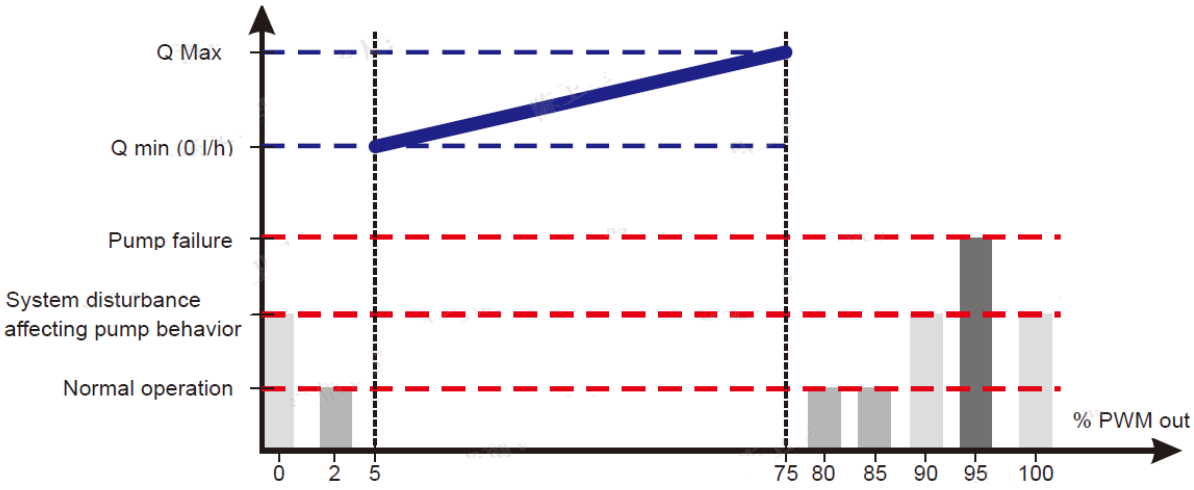

PWM output signal (%) [o-P] in 7-segments	Pump Status	Potential causes
0	Pump PWM interface damaged	iPWM interface in short circuit
2	Standby, pump is ready to run	
5-75	Pump is running normally, flow information is supplied	
80	Abnormal running mode: Pump is running but not at optimal performance	Undervoltage 160/170-194 V Self-thermal protection mode
85	Abnormal function mode Pump has stopped but is still functional	Undervoltage <160/170 V Overvoltage >250 V Unexpected external flow
90	Abnormal function mode Pump has stopped but still functional Check the installation setup and the pump	Failure on another component than pump Debris in the installation Bad temperature setup
95	The pump has stopped due to permanent failure	Pump blocked Electric module out of order
100	Problem of iPWM connection	iPWM interface in open circuit

10.8.5 Anti Freezing

If water temperature is 5ºC or lower in winter, and unit remains OFF, operate the water pump to protect the unit and pipes installation from freezing. This control is released when the water outlet temperature becomes 7ºC or higher.

Set DSW4-6 ON to activate Anti Freezing. Anti Freezing is activated factory setting. Set DSW4-6: OFF to cancel Anti Freezing through the Dip switch on PCB1.

NOTE:

Do not cancel Anti Freezing if ambient temperature around water circulation may be low to cause freezing damage.

There are 3 ways to do Anti Freezing.

① Run WP1/WP2/WP3 and Room actuator to circulate warm water to do Anti Freezing when ambient temperature and water temperature is low to cause frozen damage possibly.

② Run water pump and Auxiliary electric heater to do Anti Freezing when ambient temperature and water temperature is low continually after pump operation.

③ Run water pump and heat pump to do Anti Freezing when ambient temperature and water temperature is low continually after Auxiliary electric heater operation.

There 2 ways to do water circulation when Auxiliary electric heater or heat pump is operated to do Anti Freezing.

- Circulate whole Water Cycle to keep all system warm when DSW3-4 is ON.

Run WP1/WP2/WP3 , Room actuator and mixing valve to circulate whole Water Cycle.

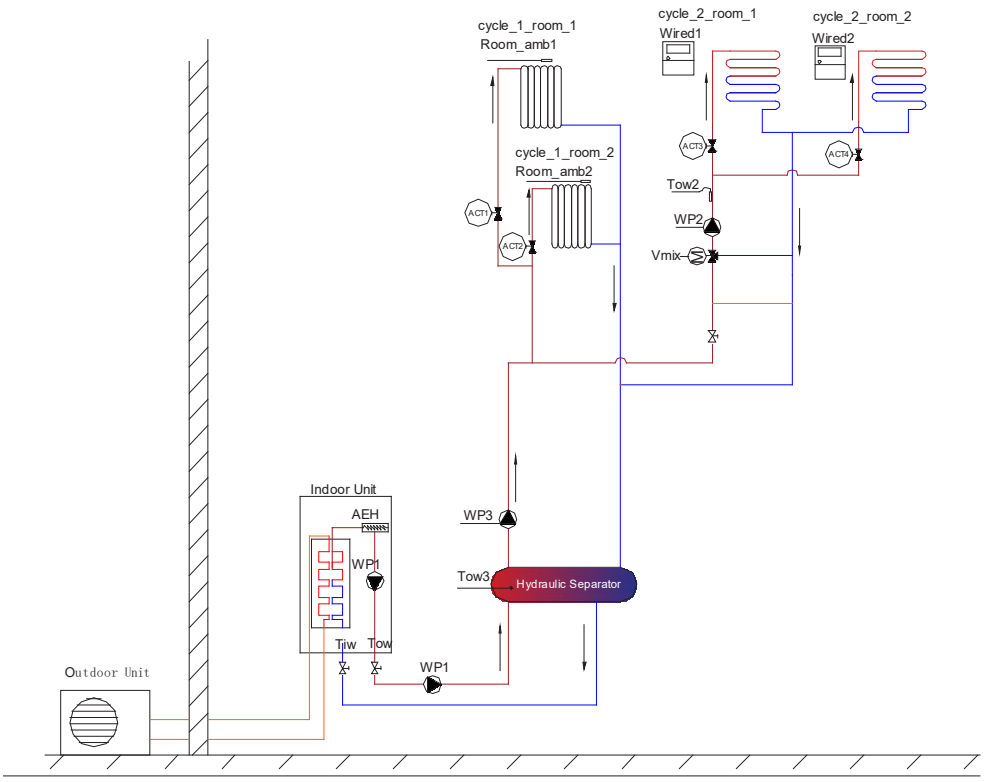

- Circulate only primary Water Cycle to save power consumption when DSW3-4 is OFF.

Run only WP1 to circulate only primary Water Cycle.

When Hydraulic separator is available

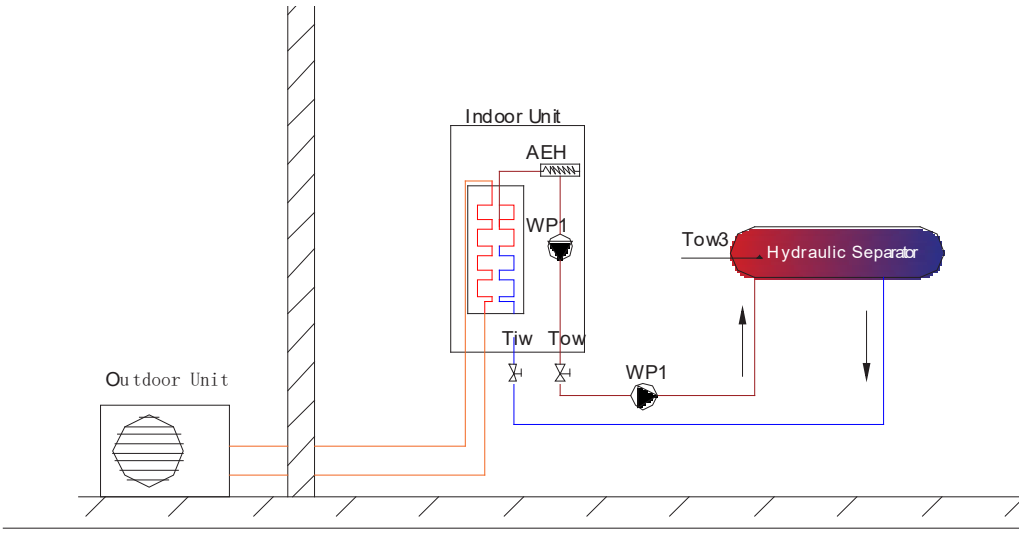

When 3WV DHW is available

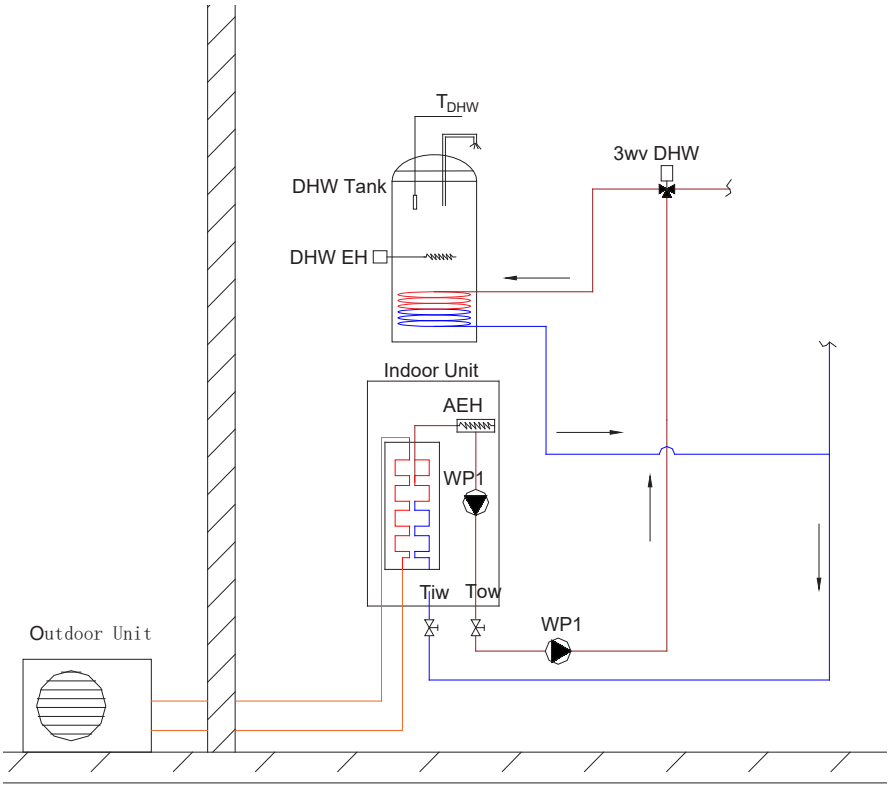

When Bypass is available

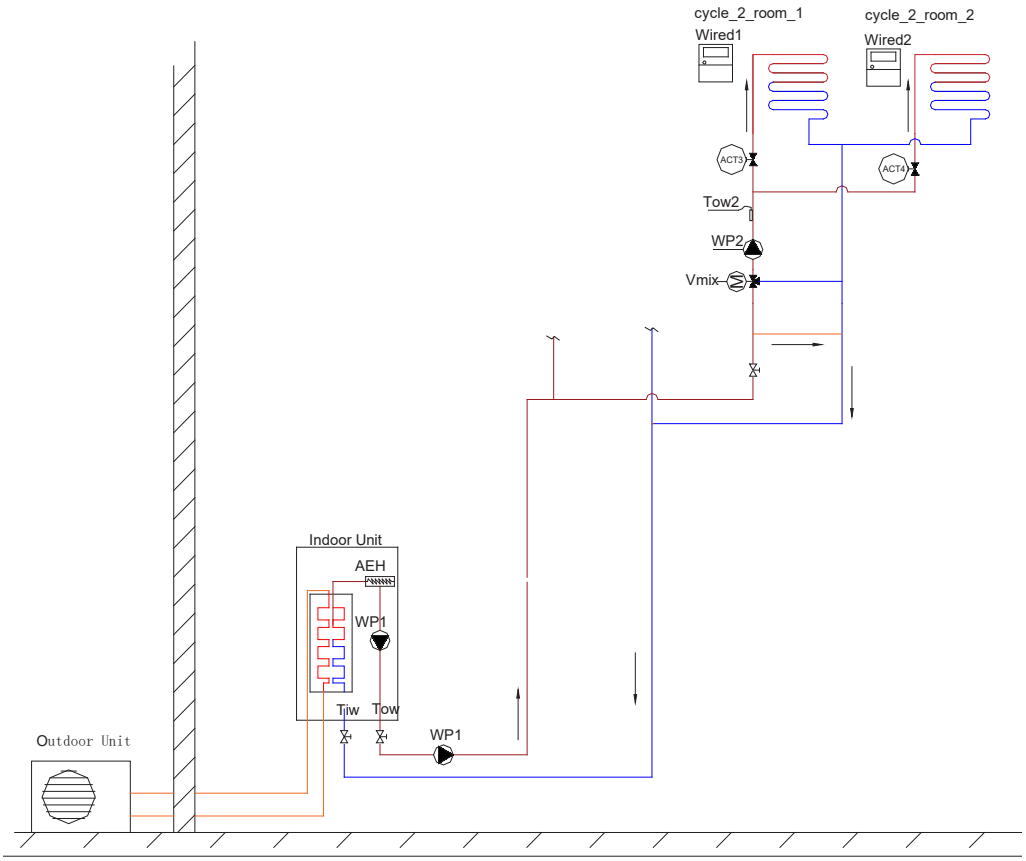

NOTE:

1. DSW3-4 ON is factory setting. Recommend DSW3-4 ON to circulate whole Water Cycle, for example no 3WV DHW or hydraulic separator is available. Make sure water circulation and Anti Freezing is fine if DSW3-4 set OFF.
2. Keep the unit power on and water circuit unblocked to do Anti Freezing in the winter.
3. Auxiliary electric heater(on-site accessory) is recommended to fit to water circuit to do Anti Freezing in the winter for monobloc unit.

10.8.6 Air purge

When commissioning and installing the unit, it is very important to remove all air in the water circuit. When the air purge function is running, the pump operates to remove air in the water circuit. By air purge mode the unit change automatically the pump speed and the position of the 3-way valve.

The configuration of this option should be done through the master controller.

Configuration →Auxiliary Function →Air purge.

Mark	Description	Default Value	Range	Steps	Units
Air purge	Start/stop air purge	stop air purge	Start/stop air purge	-	-
Air purge_T	Operation time	20	20-30	10	min

NOTE:
Air purge stops automatically after time of [Air purge_T].

To Start air purge WP1/WP2/WP3 and 3-way valves will operate according to following procedure.

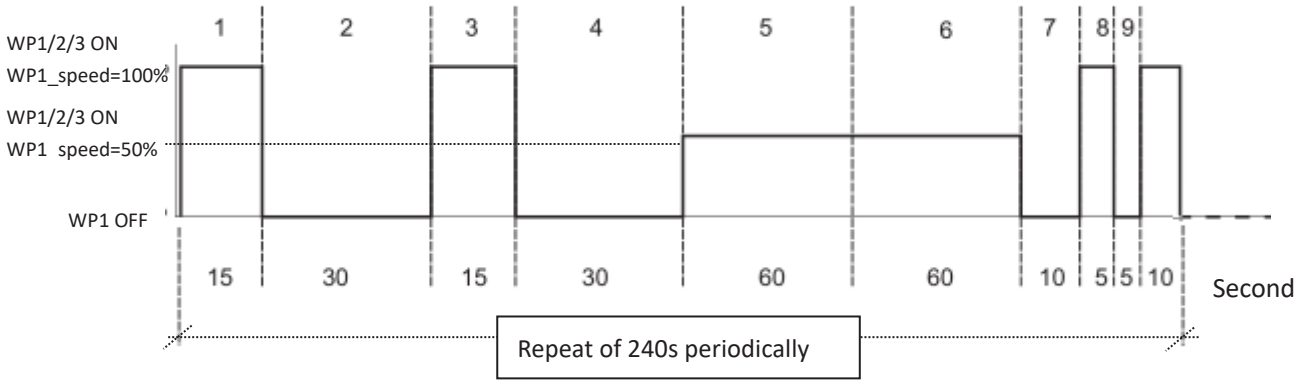

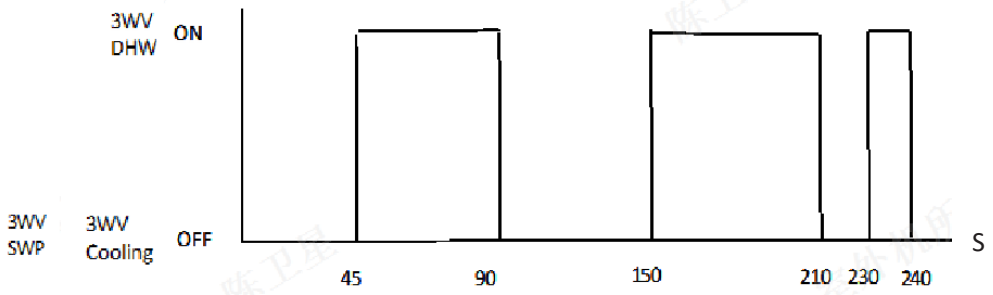

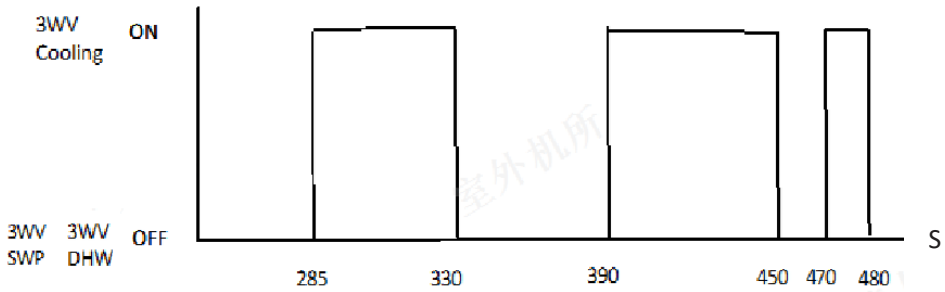

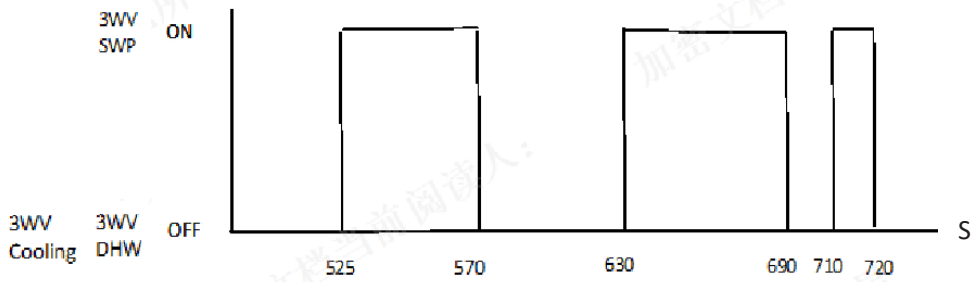

10.8.7 Seizure protection

The pump seizure protection function prevents sticking of components due to long periods of inactivity, by running the components during a short period every week. Mixing valves will also have action.

The configuration of this option should be done through the master controller.

Configuration →Auxiliary Function →Seizure Protection

Mark	Description	Default Value	Range	Steps	Units
Seizure	Status	Disabled	Disabled/Enabled	-	-
Seizure_OpInt	Operation Day	Saturday	Monday~Sunday	-	-Day
Seizure_StTim	Start Time	0:00	0:00~23:50	0:10	Time

NOTE:

Seizure protection stops automatically after 1min operation.

WP1/WP2/WP3 and 3-way valves will operate according to following procedure when Seizure protection is activated.

procedure	WP1/WP2/WP3	3WV DHW	3WV Cooling	3WV SWP	running time
①	WP1/2/3 ON WP1_speed=50%	off	off	off	0-15s
②		on	off	off	15-30s
③		off	on	off	30-45s
④		off	off	on	45-60s

10.9 Optional functions

10.9.1 Screed Drying

Unit has a special optional function exclusively used for the process of drying screed that has been newly applied to floor heating systems. This process is based on EN1264 part 4. The water temperature set-point follows a predetermined schedule upon activation of the floor screed drying function. Upon completion of the above sequence, the controller returns to normal operation. Water Cycle 1 and Water Cycle 2 are forced to ON and mode is forced to heating.

The configuration of this option should be done through the master controller.

Configuration →Auxiliary Function →Screed Drying

Mark	Description	Default Value	Range	Steps	Units
Screed_drying_TF1	Cycle 1 setting water temperature	55	25-55	1	°C
Screed_drying_TF2	Cycle 2 setting water temperature	55	25-55	1	°C
Screed_drying_start	Start Screed drying	_	_		

The unit will has 7-days space heating operation according to following procedure.

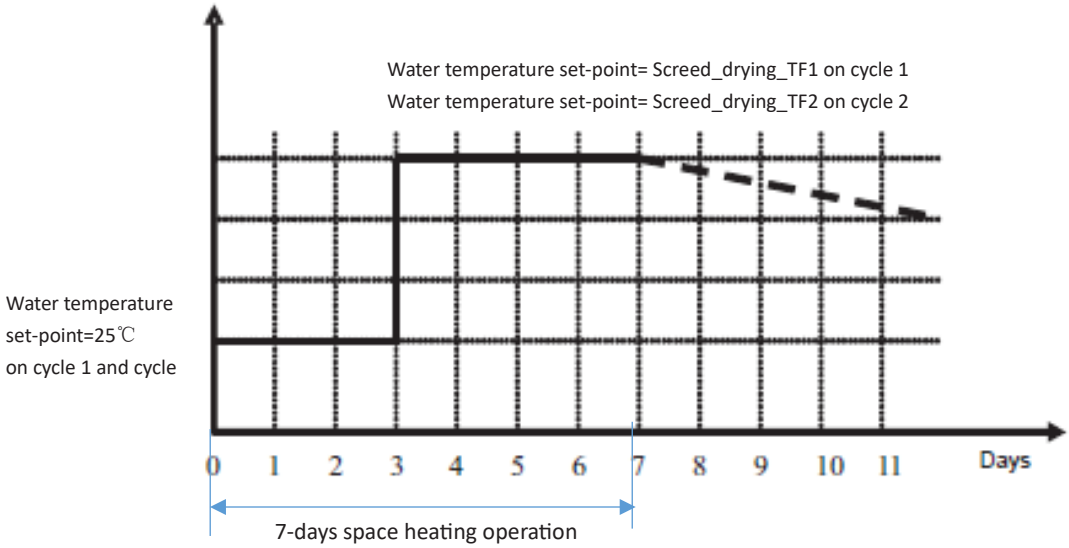

NOTE:

1. Force Water Regulation Mode as [Fix] to maintain stable outlet water temperature when Screed Drying is activated.
2. Force [Off_mode(heating)] as [ON] to maintain stable outlet water temperature when Screed Drying is activated.
3. Set Screed_drying_TF1/ Screed_drying_TF2 higher than 26°C to operate specific Water Cycle when Screed Drying is activated, otherwise specific Water Cycle will keep OFF.

10.9.2 defrost by DHW and electric heater

This function allows to perform defrost operation by DHW tank instead of by space heating water circuit.

The configuration of this option should be done through the master controller.

Configuration →Auxiliary Function →Defrost

Mark	Description	Default Value	Range	Steps	Units
Defrost_Space	Defrost By Space Heating	Disabled	Disabled /Enabled	-	-
Defrost_DHW	Defrost By DHW	Disabled	Disabled /Enabled		
Defrost_EH1	Defrost By Electrical Heater	Disabled	Disabled /Enabled	-	-

Usually Unit will perform defrost by space heating whenever [Defrost_Space] is set.

Perform defrost by DHW is permitted when all following conditions are met.

① [Defrost_DHW] set as [Enabled].

② TDHW is greater than 35 °C and Tow3 is greater than 25 °C if Hydraulic separator is available.

It is also possible to operate Auxiliary electric heater to accelerate defrost and prevent plate heat exchanger from freezing during defrost.

Operate Auxiliary electric heater during defrost when all following conditions are met.

① [Defrost_EH1] set as [Enabled].

② Tiw is less than 25 °C.

10.9.3 Second Outdoor Ambient Temperature

Optional Second Outdoor Ambient Temperature sensor accessory can be connected to the Auxiliary sensor on PCB1 in case that the heat pump is located in a non-suitable position for this measurement.

Water Cycle set-point and other applications will be determined by this Second Outdoor Ambient Temperature when sensor is configured and pluged .

NOTE:

When Second Outdoor Ambient Temperature is available Auxiliary sensor on PCB1 of indoor unit need be configured as function of [Ta_ao] to detect Second Outdoor Ambient Temperature. Refer to 10.10.

10.9.4 Energy configuration

An ESTIMATION of capacity can be checked due to usage of inlet water temperature, outlet Water temperature, feedback water flow level, output of Auxiliary electric heater and output of DHW Electric Heater.

An ESTIMATION of power consumption can be checked with 2 measuring ways.

① Use estimated power consumption feedbacked from outdoor unit invert, output of Auxiliary electric heater and output of DHW Electric Heater.

② Use power meter device to measure real power consumption. It can be done connecting an external power meter. The number of pulses of the power meter is a variable that must be set through the master controller. Use Only one power meter Or 2 separated power meter to measure real power consumption depending on setting.

- Use Only one power meter device for the whole installation (Indoor Unit + Outdoor unit).
- Use 2 separated power meter devices: One for the Outdoor Unit and another one for the Indoor Unit. Power consumption is combination of power meter1 and power meter2.

ESTIMATION of capacity and power consumption will be presented by space heating, space cooling, DHW, SWP or their total.

NOTE:

1. Capacity and power consumption is estimated .
2. Capacity and power consumption is based on Auxiliary electric heater with 3-step of 1kW/2kW/3kW if Auxiliary electric heater is configured.

The configuration of this option should be done through the master controller.

Configuration →Auxiliary Function →Energy Configuration

Mark	Description	Default Value	Range	Steps	Units
Capcon	Capacity configuration	Disabled	Disabled / Enabled	-	-
Power_meter_s	Power Meter status	Disabled	Disabled/Enabled	-	-
DHW_ht2_cap	Capacity of DHW ELE. heater	3	Disabled~1~6	0.2	kW
Power_meter1_p	Power Meter 1	Disabled	Disabled 0.1 1 10 100 1000	-	pulse/kWh
Power_meter2_p	Power Meter 1	Disabled	Disabled 0.1 1 10 100 1000	-	pulse/kWh

(1) Set [Capcon] as [Enabled] to activate ESTIMATION of capacity and power consumption.

(2) Set [Power_meter_s] as [Enabled] to use power meter device to measure real power consumption. Otherwise, power consumption is estimated by feedbacked power consumption from outdoor unit invert, output of Auxiliary electric heater and output of DHW Electric Heater.

(3) Set [Power_meter1_p] and [Power_meter2_p] to match number of pulses of the power meter.

NOTE:
Optional input signal can be configured as function of [Power meter 1] and [Power meter 2] to measure pulses of the power meter.

10.9.5 Smart function

Use Optional input signal to trigger specific action such as limiting heat pump operation to save energy.

The configuration of this option should be done through the master controller.

Configuration →Auxiliary Function →Smart Function

Mark	Description	Default Value	Range	Steps	Units
Esmart_s	Status	Disabled	Disabled/Enabled	-	-
Esmart_m	Smart Action	HP Block	HP Block HP Limited (A) SG. Grid Ready DHW Block DHW Only	-	-
Esmart_t	Function triggering Type	Closed	Closed /Open	-	-
Esmart_boiler	Start Boiler	Disabled	Disabled / Enabled	-	-
Esmart_ht2	Start DHW Heater	Disabled	Disabled / Enabled	-	-
Esmart_A	Current Limitation	60	40-100	10	%

(1) Set [Esmart_s] as [Enabled] to activate Smart Function.

(2) Set [Esmart_m] to choose Smart Action when Smart Function is triggered.

- [HP Block]: Heat Pump and Auxiliary electric heater is forbidden in any condition (Space Heating, Cooling, DHW, Swimming pool) when signal is active.

NOTE:

1. Heat Pump and Auxiliary electric heater is allowed during Anti Freezing operation when [HP Block] is activated .
2. Boiler is only complementary heat source for space heating and SWP since Heat Pump and Auxiliary electric heater is forbidden during [HP Block] . Make sure complementary heat source is available for space heating and SWP during [HP Block].

- [HP Limited (A)]: Current consumption is limited to percentage value of [Esmart_A] of full range when signal is active. Current data is based on Outdoor unit real current (A) given by compressor.
- [DHW Block]: DHW Operation is forbidden when signal is active. Space Heating/Cooling, Swimming pool is allowed normally.
- [DHW only]: Space Heating/Cooling, Swimming pool is forbidden except DHW when signal is active. DHW operation is allowed normally.
- [SG. Grid Ready]: The control technology by integrating the individual heat pump allows in a smart grid by using 2 digital inputs establishing an unidirectional connection and allowed for four different operation modes:

item	SG Ready Input 1	SG Ready Input 2	Action	Description
1	Open	Open	Standard HP mode	SG is not activated
2	Closed	Open	HP Block	Run as [HP Block]
3	Open	Closed	Low price mode	Following forced action ① Space Heating: Increase Water temperature setting by +5°C ② DHW: Increase DHW setting Temperature by + 7°C ③ [Ehb] ≥ -2 [°C], [WTEH]≤80[min], [H dif]≤4[°C] forced for Auxiliary electric heater ④ [DHWEH]≤60[min], [DHW_ht_diff]≤6[°C] forced for DHW electric heater
4	Closed	Closed	Overcapacity mode	Following forced action ① Space Heating: Increase Water temperature setting to [c1_wate_h_max] ② DHW: Increase DHW setting Temperature to 70°C ③ [Ehb]≥6 [°C], [WTEH]≤30[min], [H dif]≤1[°C] forced for Auxiliary electric heater ④ [DHW_ht_diff]≤4[°C], [DHW_ht_mode]= [H.Demand] forced for DHW electric heater

NOTE:

Optional input signal can be configured as function of [Smart Act./SG Ready Input 1] and [SG Ready Input 2] to response smart grid.

(3) Set [Esmart_t] to choose Type of triggering signal.

NOTE:

Optional input signal can be configured as function of [Smart Act./SG Ready Input 1] to trigger Smart Function.

(4) Set [Esmart_boiler] as [Enabled] to allow boiler operation to offer complementary heat capacity for DHW during [HP Block]

(5) Set [Esmart_ht2] as [Enabled] to allow DHW electric heater operation to offer complementary heat capacity for DHW during [HP Block].

NOTE:

DHW electric heater and boiler both can be complementary heat source for DHW during [HP Block]. DHW electric heater has priority to operate DHW during [HP Block] when both DHW electric heater and boiler are available. Make sure one complementary heat source at least is available for DHW during [HP Block].

10.9.6 Duty Control

Duty signal (0-10V, 0-5V or 4-20mA)can used to adjust setting temperature of Water Cycle 1 , Water Cycle 2, DHW or SWP.

The configuration of this option should be done through the master controller.

Configuration →Auxiliary Function →Demand Control(duty)

Mark	Description	Default Value	Range	Steps	Units
duty_s	Status	Disabled	Disabled/Enabled	-	-
duty _m	Signal Type	0-10V	0-10V 0-5V 4-20mA	-	-
duty _f	Setting function	DHW	DHW cycle1 cycle1 SWP	-	-

NOTE:

Auxiliary sensor on PCB1 of indoor unit need be configured as function of [duty] to detect duty signal. Refer to 10.10.

(1) Set [duty_s] as [Enabled] to activate Duty Control Function.

(2) Set [duty _m] to choose Signal Type when Duty Control Function is activated.

(3) Set [duty _f] to choose specific function to adjust setting temperature when Duty Control Function is activated.

Setting temperature of specific function is adjusted according to duty signal as following.

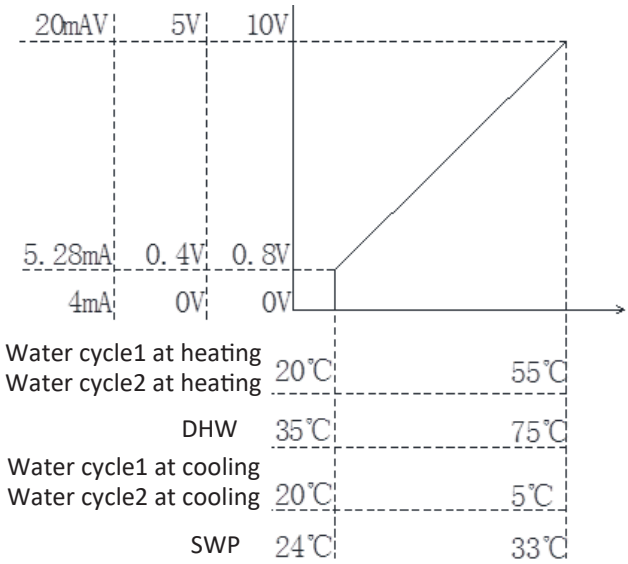

10.9.7 Night Shift

Night shift function reduces compressor load and fan speed in order to reduce environmental noise, preferably at night. When Night shift function is active, the capacity of the unit is reduced to the percentage defined as [night_shift_demand].

NOTE:

Make sure unit has enough capacity during Night shift.

There are 2 ways to activate Night shift function.

- Night shift function can be set through the master controller.

Configuration →Auxiliary Function →Night shift.

Mark	Description	Default Value	Range	Steps	Units
night_shift_s	Status	Disabled	Disabled / Enabled	-	-
night_shift_demand	Capacity Limitation	75	40-100	10	%
night_shift _StTim1	Starting time	20:00	0:00~24:00	0:10	Time
night_shift _StTim2	Stopping time	08:00	0:00~24:00	0:10	Time

- Night shift function can also be set through the master controller [favourite] button.

Mark	Description	Default Value	Range	Steps	Units
[favourite] button	Night Mode	OFF	OFF/ON	-	-

10.9.8 Quiet Mode

Quiet Mode function reduces compressor load and fan speed in order to reduce environmental noise. When Quiet Mode function is active, Outdoor unit will run at quiet mode of [dB] as 1.

Quiet Mode function is set through the master controller [favourite] button.

Mark	Description	Default Value	Range	Steps	Units
[favourite] button	Quiet Mode	OFF	OFF/ON	-	-

10.10 Input /Output /Auxiliary sensors

NOTE:

After changing the input settings, output settings and auxiliary sensor settings on the master controller, it needs to be powered off and on again to take effect.

10.10.1 Input

The unit offers 11 optional input ports that can be configured as different function.

The configuration of this option should be done through the master controller.

Configuration →I/O →Inputs

Mark	Description	Default Value	Range	Terminals ON board	Terminals ON PCB1	Specification ON board
i1	Input 1	08 (Demand ON/OFF1)	00~17 (except 07, 12)	I1, L1 on TB3	PCN4-1	Closed/Open 220-240V ~ 50/60Hz
i2	Input 2	13 (Cycle 1 and 2 ECO mode)	00~17 (except 07, 12)	I2, +12V on TB4	CN2-1	Closed/Open 12V DC
i3	Input 3	00 (No Function)	00~17 (except 07, 12)	I3, L3 on TB3	PCN10-3	Closed/Open 220-240V ~ 50/60Hz
i4	Input 4	04 (Solar in)	00~17 (except 07, 12)	I4, L3 on TB3	PCN10-1	Closed/Open 220-240V ~ 50/60Hz
i5	Input 5	02 (Smart Act.)	00~17 (except 07, 12)	I5, +12V on TB4	CN2-3	Closed/Open 12V DC
i6	Input 6	06 (DHW boost)	00~17 (except 07, 12)	I6, L3 on TB3	PCN10-5	Closed/Open 220-240V ~ 50/60Hz
i7	Input 7	07 (Power meter 1)	00~17	I7, COM on TB4	JL-1	Closed/Open 12V DC
i8	Input 8	12 (Power meter2)	00~17	I8, COM on TB4	JL-2	Closed/Open 12V DC
i9	Input 9	09 (Demand ON/OFF2)	00~17 (except 07, 12)	I9, +12V on TB4	CN11-3	Closed/Open 12V DC
i10	Input 10	00 (No Function)	00~17 (except 07, 12)	I10, +12V on TB4	CN11-4	Closed/Open 12V DC
i11	Input 11	00 (No Function)	00~17 (except 07, 12)	I11, +12V on TB4	CN11-4	Closed/Open 12V DC

Optional function can be configured.

Input codes	Mark	Description
00	No Function	-
02	Smart Act./ SG Ready Input 1	This function must be used to stop or limit the heat pump and Auxiliary electric heater when restricted by Electric company. It allows an external Smart switch device to switch off or reduce consumption of the heat pump and Auxiliary electric heater during time of peak electricity demand. In case of using Smart Grid application, this input is used as a digital input 1 and allows four different operating modes.
03	Swimming pool Demand ON/OFF	Optional input signal can be configured as function of “”Swimming pool Demand ON/OFF”” to operate SWP. Switch ON/OFF of SWP can also be controlled by master controller. Closed: Start SWP operation (Switch ON and Demand ON) Open: Stop SWP operation (Switch OFF and Demand OFF)
04	Solar in	In case of combining Unit with solar panels, this input is used as a feedback for solar station ready operation. Closed: Solar in ON to trigger solar pump operation ON Open: Solar in OFF to trigger solar pump operation OFF
05	Forced Heating/ Cooling	Heating/cooling can be changed by an input of an external contact signal. Heating/cooling can also be changed over by master controller. Closed: Heating mode Open: Cooling mode
06	DHW Boost	With this function enabled, it is possible to request a heating up of the DHW when user requires an instantaneous delivery of DHW. Triggering input signal can also Switch ON DHW.
07	Power meter 1	Input used as kW/h pulse count for Energy data recording, used to count energy data or the total energy data.
08	Demand ON/OFF 1	Optional input signal can be configured as function of “Demand ON/OFF 1” or “Demand ON/OFF 2” and selected as room thermostat.

09	Demand ON/OFF 2	Closed: Corresponding room thermostat Switch ON and Thermo ON. Open: Corresponding room thermostat Switch OFF and Thermo OFF. Corresponding room thermostat can also be Switch ON/OFF by Rooms function on Master controller.
10	Forced heating	Forced Heating mode by input of contact signal, Heating can also be changed over by master controller. Closed: Forced Heating mode Open: No action
11	Forced cooling	Forced Cooling mode by input of contact signal, Cooling can also be changed over by master controller. Closed: Forced Cooling mode Open : No action
12	Power meter 2	Input used as kW/h pulse count for Energy data recording, used to count energy data or the total energy data.
13	Cycle 1 and 2 ECO mode	Cycle 1 and Cycle 2 Water ECO offset. Current water temperature setting is reduced or increased by the indicated parameter in space heating mode or space cooling mode. Closed: Cycle 1 and Cycle 2 Water ECO offset enabled Open: Cycle 1 and Cycle 2 Water ECO offset disabled
14	Cycle 1 ECO mode	Cycle 1 Water ECO offset. Current water temperature setting is reduced or increased by the indicated parameter in space heating mode or space cooling mode. Closed: Cycle 1 Water ECO offset enabled Open: Cycle 1 Water ECO offset disabled
15	Cycle 2 ECO mode	Cycle 2 Water ECO offset. Current water temperature setting is reduced or increased by the indicated parameter in space heating mode or space cooling mode. Closed: Cycle 2 Water ECO offset enabled Open: Cycle 2 Water ECO offset disabled
16	Force OFF	Force OFF the unit include Water Cycle 1, Water Cycle 2, DHW and SWP. Switch ON/OFF of different function can also be controlled by master controller. Closed: Forced OFF the unit include Water Cycle 1, Water Cycle 2, DHW and SWP. Open: No action
17	SG Ready Input 2	In case of using Smart Grid application, this input is used as a digital input 2 and allows four different operating modes.

NOTE:

Function of 05 (Forced Heating/Cooling)/ Function of 10 (Forced heating)/ Function of 11 (Forced cooling)cannot be used simultaneously.

(1) Forced Heating/cooling

Heating/cooling can be changed by an input of an external contact signal. Heating/cooling can also be changed over by controller.

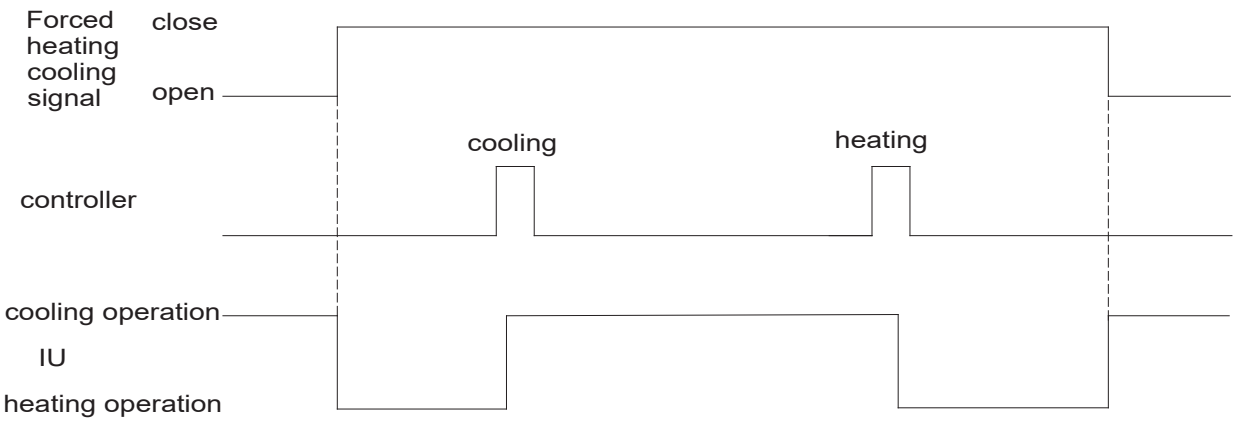

(2) Forced heating

Forced Heating mode can be changed by an input of an external contact signal. Heating/cooling can also be changed over by controller.

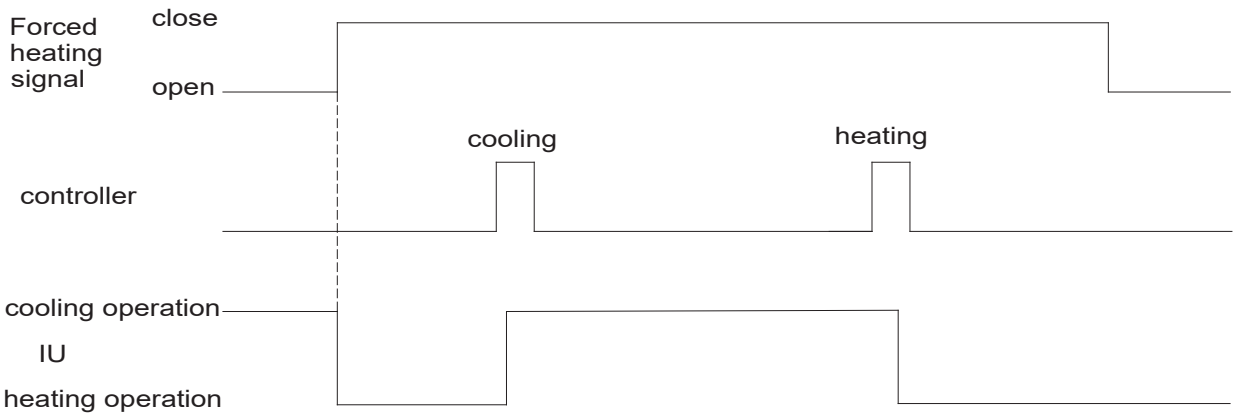

(3) Forced cooling

Forced Cooling mode can be changed by an input of an external contact signal. Heating/cooling can also be changed over by controller.

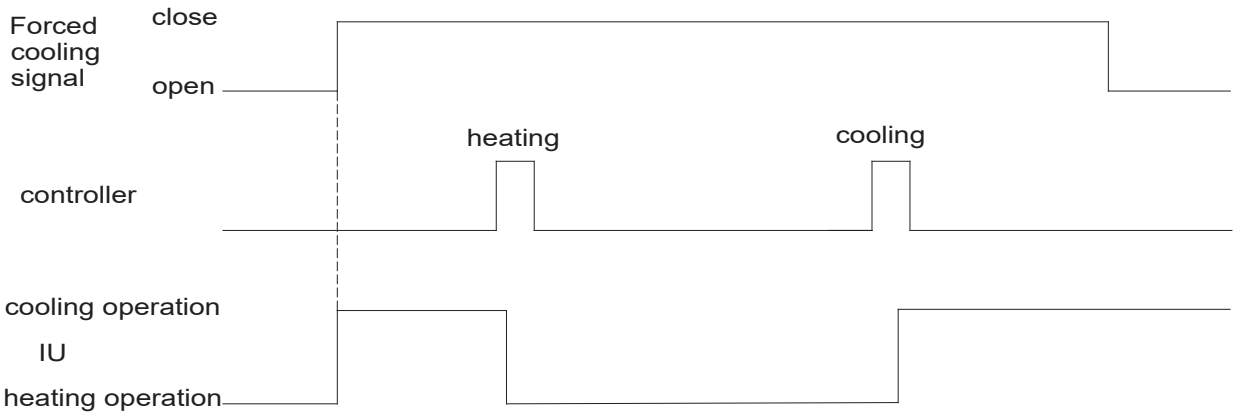

(4) Force OFF

Force OFF the unit include Water Cycle 1, Water Cycle 2, DHW and SWP. Switch ON/OFF of different function can also be controlled by master controller.

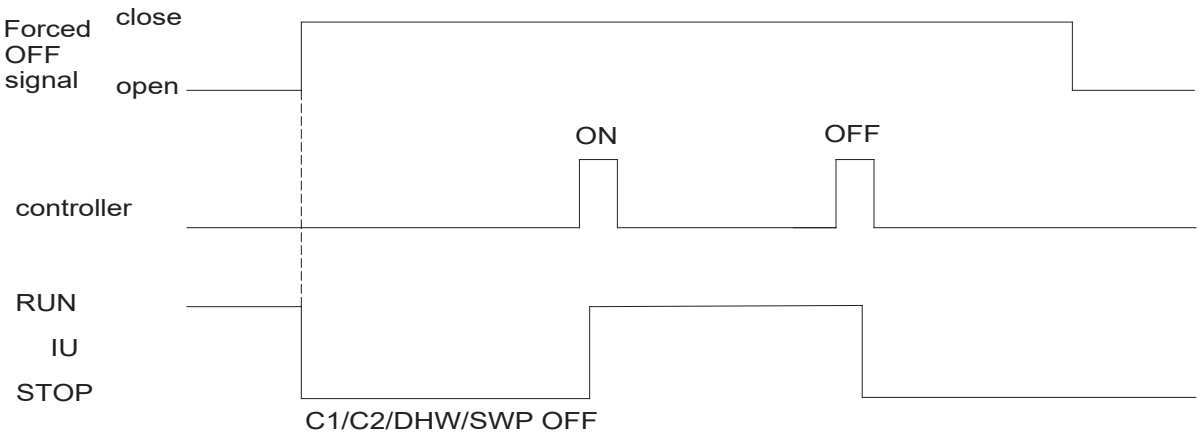

(5) Demand ON/OFF1 and Demand ON/OFF2

Switch ON/OFF and Thermo ON/OFF of Corresponding room is controlled by an input of an external contact signal.
Corresponding room thermostat can also be Switch ON/OFF by Rooms function on Master controller.

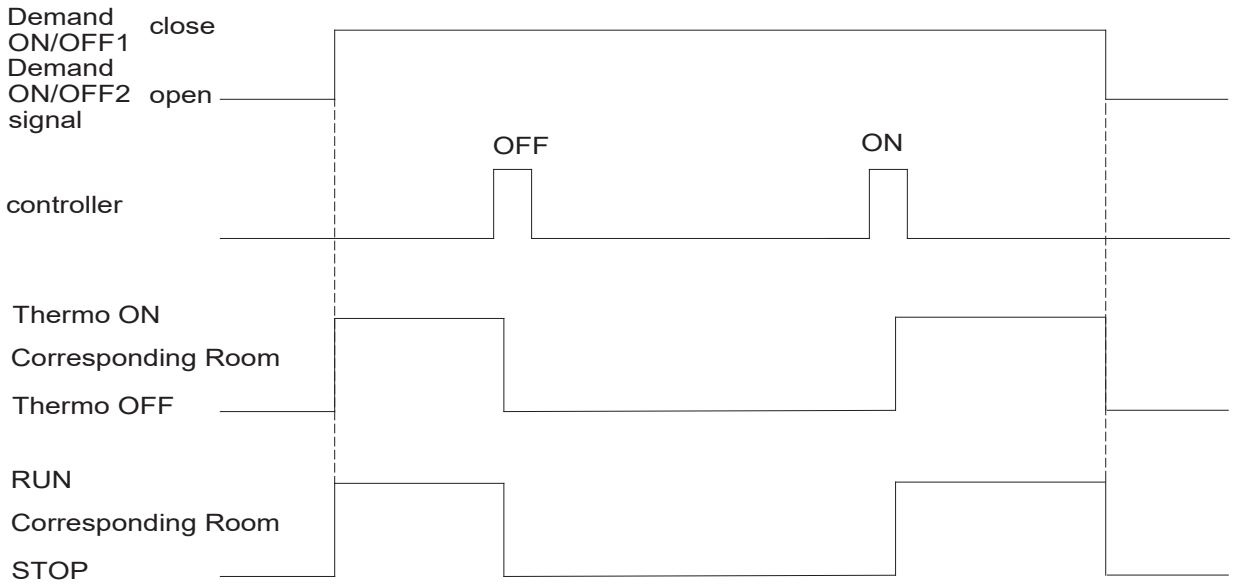

(6) Swimming pool Demand ON/OFF

Switch ON/OFF and Demand ON/OFF of SWP is controlled by an input of an external contact signal.

SWP can also be Switch ON/OFF by Master controller.

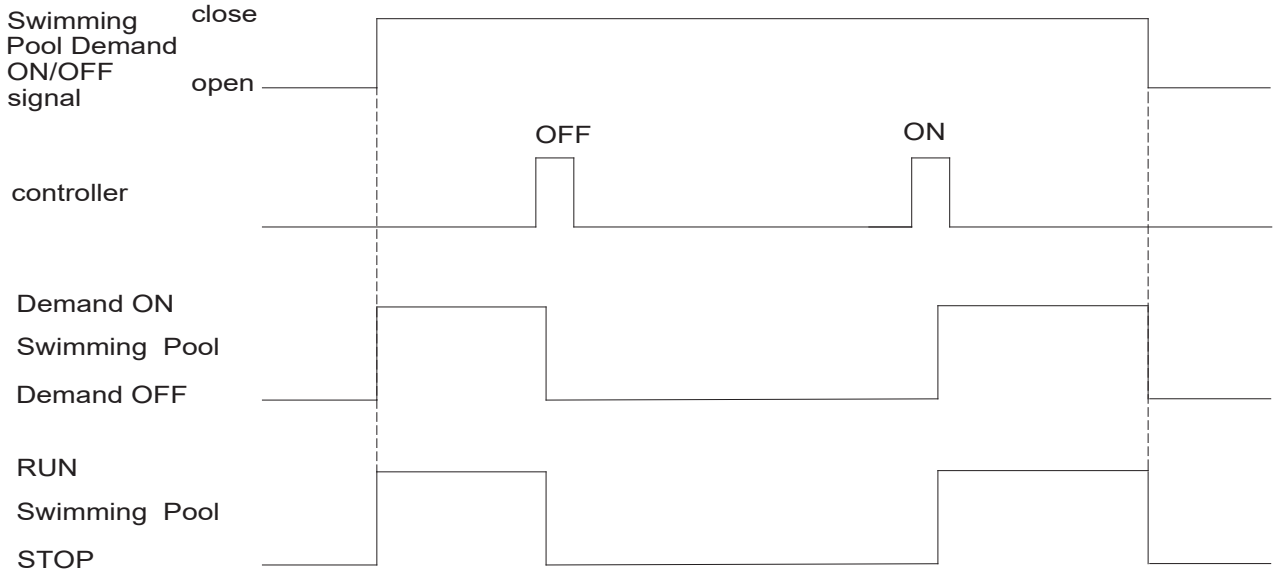

(7) DHW Boost

An input of an external contact signal of DHW Boost can be used to Switch ON of DHW. DHW can also be Switch ON/OFF by Master controller.

Valid signal is depending on setting [Trigger type] of DHW Boost referring to 10.3.6.

- Set [Trigger type] as [Closed]

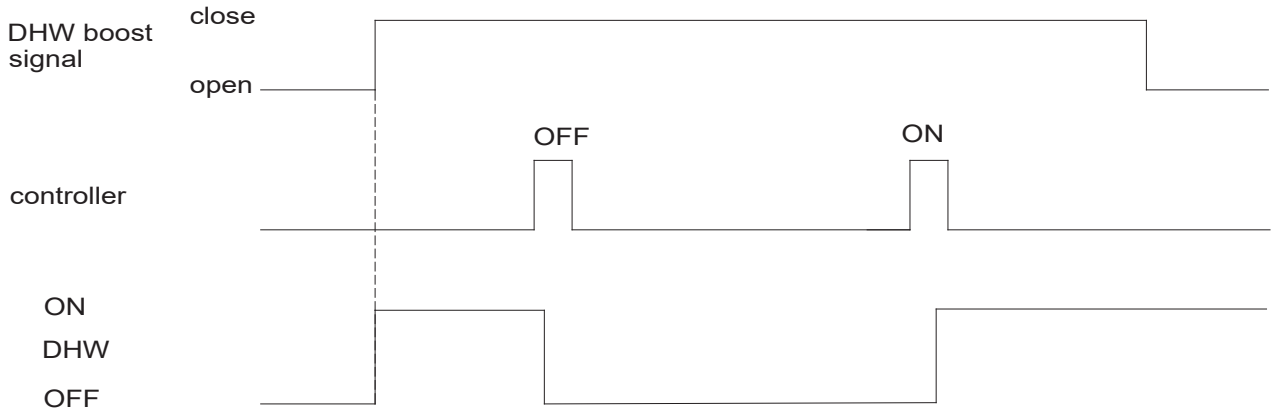

- Set [Trigger type] as [Open]

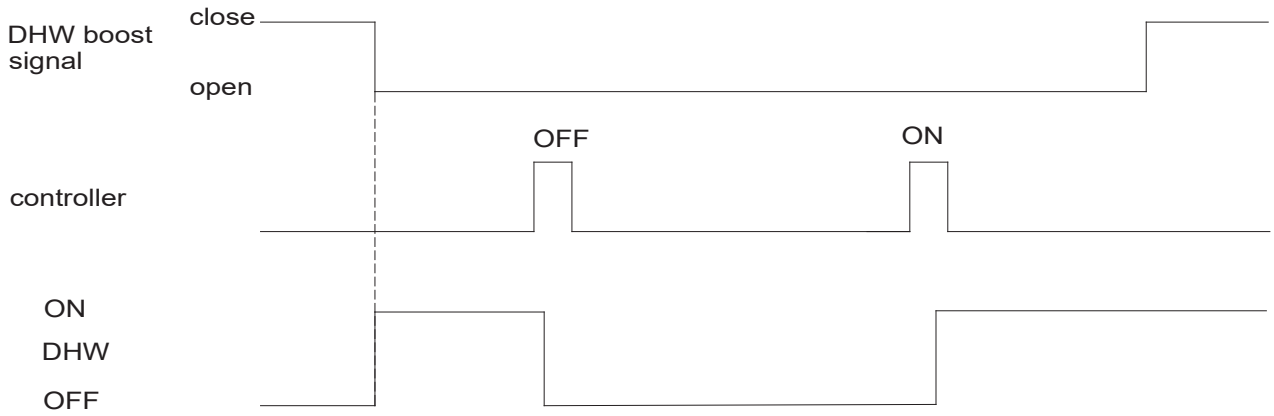

10.10.2 Output

The unit offers 15 optional output ports that can be configured as different function.

The configuration of this option should be done through the master controller.

Configuration →I/O →Outputs

Mark	Descripti on	Default Value	Range	Terminals ON board		Terminal s ON PCB1	Specification ON board
o1	Output 1	01 (3WV SWP)	0~29 (except 17,02,21,08)	Power supply	L2, N6 on TB3	PCN9-3	ON/OFF 220-240V ~ 50/60Hz Max. 1.0A
				Signal line	O1 on TB3		
o2	Output 2	02 (WP3)	0~29 (except 17)	O2, N2 on TB2		CN8-2	ON/OFF 220-240V ~ 50/60Hz Max. 1.0A
o3	Output 3	03 (Boiler combination)	0~29 (except 17,02,21,08)	O3 on TB2		PCN14- 1	Free voltage
o4	Output 4	04 (Solar out)	0~29 (except 17,02,21,08)	O4 on TB3		PCN16- 1	Free voltage
o5	Output 5	17 (DHW Electric Heater)	0~29	HL, HN on TB1		PCN15- 1	ON/OFF 220-240V ~ 50/60Hz Max. 13A
o6	Output 6	18 (3WV DHW)	0~29 (except 17,02,21,08)	Power supply	L2, N6 on TB3	PCN2-1	ON/OFF 220-240V ~ 50/60Hz Max. 1.0A
				Signal line	O6 on TB3		
o7	Output 7	19 (Mixing valve Close)	0~29 (except 17,02,21,08)	O7, N4 on TB2		PCN12- 1	ON/OFF 220-240V ~ 50/60Hz Max. 1.0A
o8	Output 8	20 (Mixing valve Open)	0~29 (except 17,02,21,08)	O8, N4 on TB2		PCN12- 3	ON/OFF 220-240V ~ 50/60Hz Max. 1.0A
o9	Output 9	21 (WP2)	0~29(except 17)	O9, N1 on TB2		CN20-3	ON/OFF 220-240V ~ 50/60Hz Max. 1.0A
o10	Output 10	22 (3WV Cooling)	0~29 (except 17,02,21,08)	Power supply Signal line	L1, N5 on TB3 O10 on TB3	PCN8-1	ON/OFF 220-240V ~ 50/60Hz Max. 1.0A
o11	Output 11	08 (WP1)	0~29 (except 17)	O11, N1 on TB2		CN20-2	ON/OFF 220-240V ~ 50/60Hz Max. 1.0A
o12	Output 12	23 (Act1)	0~29 (except 17,02,21,08)	O12, N2 on TB2		CN8-3	ON/OFF 220-240V ~ 50/60Hz Max. 1.0A
o13	Output 13	24 (Act2)	0~29 (except 17,02,21,08)	O13, N3 on TB2		PCN13-5	ON/OFF 220-240V ~ 50/60Hz Max. 1.0A
o14	Output 14	25 (Act3)	0~29 (except 17,02,21,08)	O14, N3 on TB2		PCN13-3	ON/OFF 220-240V ~ 50/60Hz Max. 1.0A
o15	Output 15	26 (Act4)	0~29 (except 17,02,21,08)	O15, N4 on TB2		PCN13-1	ON/OFF 220-240V ~ 50/60Hz Max. 1.0A

Optional function can be configured.

Output code	Mark	Description
00	No Function	-
01	3WV SWP	In case of combining Unit with swimming pool, this output is used to drive 3-way valve diverting to the swimming pool heat exchanger. Output ON signal when swimming pool function is operating.
02	WP3	In case of combining Unit with hydraulic separator, this output is used to drive relay of water pump 3.
03	Boiler combination	In case of combining Unit with boiler, this output is used to Start/Stop it.
04	Solar out	In case of combining Unit with solar panel, this output is used to drive relay of solar pump.
05	Alarm signal	Output ON signal when an Alarm Code is existence.
06	SWP signal	Output ON signal in case that Swimming pool function is demand ON.
07	Cooling signal	Output ON signal in case that Space Cooling is Thermo-ON.
08	WP1	In case of the pipeline connected to the unit is long leading to low water flow rate, this output is used to drive relay of a extra WP1 that can be cascaded with inside EC WP1 to offer additional hydraulic head. The extra WP1 works equally with inside EC WP1.
09	Heating signal	Output ON signal in case that Space Heating is Thermo-ON.
10	DHW signal	Output ON signal in case that DHW is demand ON or DHW Electric Heater is ON.
11	Solar overheat	Output ON signal in case that solar panels overheat protection is activated.
12	Defrost	Output ON signal in case that the outdoor unit is defrosting.
13	DHW re-circulation pump	Output ON signal to drive relay of a re-circulation pump in case of re-circulation pump is available for DHW tank.
14	Heater relay 1	Copy ON/OFF signal of Auxiliary electric heater output terminal 1.
15	Heater relay 2	Copy ON/OFF signal of Auxiliary electric heater output terminal 2.
16	c1 water ON/OFF	Output ON signal in case that Water Cycle1 switch ON.
17	DHW Electric Heater	Output ON signal in case the DHW Electric Heater is Enabled and meet the ON conditions.
18	3WV DHW	In case of combining Unit with DHW, this output is used to drive 3-way valve diverting to the sanitary tank inner coil. Output ON signal when DHW function is operating.
19	Mixing valve Close	Mixing valve has 2 operation terminals of closing valve and opening valve. Optional output signal need be configured as function of “Mixing valve Close” and “Mixing valve Open” to drive mixing valve.
20	Mixing valve Open	
21	WP2	When Water Cycle 2 is available Optional Output signal need be configured to drive relay of water pump 2.
22	3WV Cooling	In case of combining Unit with cooling fan coil, this output is used to drive 3-way valve diverting to cooling fan coil. Output ON signal when space cooling is operating.
23	Act1	Room actuators, output ON signal in case the corresponding Room Thermostat is Thermo ON (heating and cooling). And also meet follow condition Room actuators also Output ON: ① Air purge ② Anti freezing ③ Screed Drying ④ Retry operation due to anti freezing (alarm-76 , d1-31, d1-03) ⑤ Outdoor Unit defrost without Room Thermostat Thermo ON ⑥ Overrun after requiring OFF
24	Act2	
25	Act3	
26	Act4	
27	Act5	
28	Act6	
29	Act7	

10.10.3 Auxiliary sensors

The unit offers 7 Auxiliary sensors that can be configured as different function.

The configuration of this option should be done through the master controller.

Configuration →I/O →Auxiliary sensors.

Mark	Description	Default Value	Terminals ON board	Terminals ON board	Terminal s ON PCB1	Specification ON board
As1	Auxsensor1	01 (Tow3)	00~13	A1 On PCB4	THM8	-
As2	Auxsensor2	03 (Tsolar)	00~13	A2 On PCB4	THM10	-
As3	Auxsensor3	02 Tswp	00~13	A3 On PCB4	THM9	-
As4	Auxsensor4	05 (Tow2)	00~13	A4 On PCB4	THM6	-
As5	Auxsensor5	00 (No Function)	00~13	A5 On PCB4	THM11	-
As6	Auxsensor6	07 (Room_amb1)	00~13	A6 On PCB4	THM17	-
As7	Auxsensor7	08 (Room_amb2)	00~13	A7 On PCB4	THM18	-

Optional function can be configured.

Auxiliary sensor code	Mark	Description
00	No Function	-
01	Tow3	This sensor is used in case to combine Unit with hydraulic separator to detect Hot water temperature detection of hydraulic separator.
02	Tswp	In case of combining Unit with swimming pool, this sensor is used to detect swimming pool water temperature.
03	Tsolar	In case of combining Unit with solar panels, this sensor is used to Detect Hot water temperature of solar panels.
04	Ta_ao	Optional Second Outdoor Ambient Temperature sensor accessory can be connected to the Auxiliary sensor in case that the heat pump is located in a non-suitable position for this measurement.
05	Tow2	When Water Cycle 2 is available, auxiliary sensor need be configured as function of “Tow2” to detect outlet water temperature of Water Cycle 2.
06	duty	Used to detect duty signal when duty signal control is Enabled, the duty signal type can be 0- 10V, 0-5V or 10-20mA.
07	Room_amb1	Rooms function on master controller is selected as room thermostat, and in this scenario, auxiliary sensor can be configured as function of “Room_amb1...7”, and can be selected as room temperature detection of specific room.
08	Room_amb2	
09	Room_amb3	
10	Room_amb4	
11	Room_amb5	
12	Room_amb6	
13	Room_amb7	

10.11 Test Run

10.11.1 Actuator test run

Purpose of the actuator test run is to confirm the operation of the different output signals (e.g., when you select Pump, a test run of the pump will start).

Select [Actuator_test_Output] of output ports and [Actuator_test_T] of run time to start output ON signal.

The configuration of this option should be done through the master controller.

Configuration →Actuator test run.

Mark	Description	Default Value	Range	Steps	Units
Actuator_test	Start/stop	stop	Start/stop	-	-
Actuator_test_T	run time	5	5-20	5	min
Actuator_test_Output	output test run signal	Output15	Output1- Output15	-	-

NOTE:

1. Make sure that all air is purged before executing the test run. Also avoid disturbances in the water circuit during the test run.
2. Be careful to run actuator test of output signal of DHW Electric Heater. DO NOT CAUSE OVERHEAT.
3. Stop the unit before executing the test run.
4. Actuator test run will stop automatically after [run time].

10.11.2 Unit test run

Select run time, mode and function to start unit test run.

The configuration of this option should be done through the master controller.

Configuration →Actuator test run.

Mark	Description	Default Value	Range	Steps	Units
	Start/stop	stop	Start/stop	-	-
	run time	5	20-120	5	min
	mode	heating	cooling/heating		
	function	C1	C1/C2/DHW/swimming pool	-	-

NOTE:

1. Make sure that all air is purged before executing the test run. Also avoid disturbances in the water circuit during the test run.
2. Make sure that minimum water volume is guaranteed in all conditions.
3. Check all electrical, refrigerant and water circuit installation carefully before unit test run.

11. Control configuration for OU

11.1 Control Logic

No.		Item	Details
1	Cooling Operation	Comp.Frequency Control	Quasi PI Control： (1) Difference between indoor outlet water temperature and target outlet water temperature (2) Amount of temperature difference change.
		O.U. Electronic Exp. Valve Control	Quasi PI Control: To determine the O.U. electronic expansion valve opening so as to keep the temperature at the top of compressor at an optimum level.
		O.U. Fan Control	To control the fan steps so that hight pressure is within a stable temperature range.
		Reversing Valve Control	Reversing Valve: ON
2	Heating Operation	Comp.Frequency Control	Quasi PI Control: (1) Difference between indoor outlet water temperature and target outlet water temperature (2) Amount of temperature difference change.
		O.U. Electronic Exp. Valve Control	Quasi PI Control: To determine the O.U. electronic expansion valve opening so as to keep the temperature at the top of compressor at an optimum level.
		O.U. Fan Control	The fan steps are dependent on Ta in the beginning. After to control the fan steps so that hight and low pressure are within a stable temperature range and Te is within a stable temperature range.
		Reversing Valve Control	Reversing Valve: OFF
3	Defrost Operation	Comp.Frequency Control	Fixed compressor frequency
		O.U. Electronic Exp. Valve Control	To determine the O.U. electronic expansion valve opening depending on the discharge temperature of the compressor , hight pressure and defrost time.
		O.U. Fan Control	To stop the outdoor fan.
		Reversing Valve Control	Reversing Valve: ON

11.2 Defrost Operation

< Defrost Operation >

The following defrost operations, “Standard Defrost”, “Forced Defrost” and “Manual Defrost” are available.

(1) Standard Defrost
This operation starts according to the outdoor temperature, the outdoor evaporating temperature and the operating time.

(2) Forced Defrost
This operation starts when the indoor unit repeats Thermo-ON/OFF* operation and therefore cannot start the “Standard Defrost.”

(3) Manual Defrost
This operation starts when the push switch “PSW1” on the outdoor unit PCB is pressed for more than 3 seconds during maintenance, etc. (This function cannot be used when the pressure and the outdoor evaporating temperature is high or at the beginning of the operation.)

NOTE:
Do not repeatedly use “Manual Defrost” frequently.

* Thermo-ON: The outdoor unit and some indoor units are running.
Thermo-OFF: The outdoor unit and some indoor units stay on, but don’t run.

< Condition for Starting Defrost Operation >

(1) Standard Defrost

(a) Temperature Condition

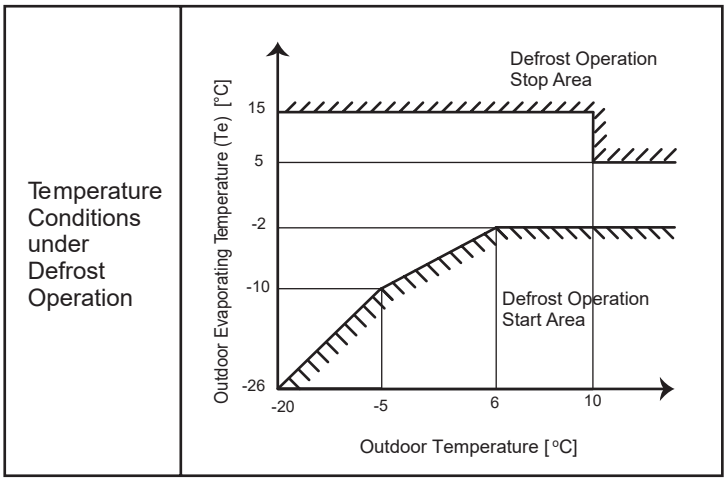

(b) Condition of Operating Time for Defrost Operation Start
The defrost operation starts when the temperature condition shown in “(a) Temperature Condition” is met after a heating operation of 40 to 120 minutes. The heating operation time is determined by estimating the amount of frost on the heat exchanger.

(2) Forced Defrost
The “Forced Defrost” starts when all the following conditions are met.

(a) The reversing valve is “OFF” for more than 120 minutes.

(b) The outdoor temperature is 10 °C or lower.

(c) The accumulated heating operation time is more than 60 minutes.
(The accumulated time is reset when the operation is stopped or the defrost operation is performed.)

(d) The compressor is operated continuously for more than 90 seconds.

(e) The outdoor evaporating temperature is lower than 5°C and the high pressure is lower than 3.3Mpa or pressure ratio is more than 8.5 or difference between outlet water temperature and inlet water temperature of plate heat exchanger is lower than 2°C right before the operation starts.

< Condition for Completing Defrost Operation >

The defrost operation stops when any of the following conditions is met.

(1) The outdoor evaporating temperature reaches 25°C within 2 minutes after the defrost operation starts.

(2) The outdoor evaporating temperature reaches 20°C (the outdoor temperature < 10°C) after a lapse of 2 minutes or more from the defrost operation start.

(3) The outdoor evaporating temperature reaches 5°C (the outdoor temperature > 10°C) after a lapse of 2 minutes or more from the defrost operation start.

(4) The temperature at the top of the compressor reaches 132°C.

(5) The high pressure reaches 3.3MPa within 20 seconds after the defrost operation starts.

(6) The high pressure reaches 3.1MPa after a lapse of 2 minutes or more from the defrost operation start.

(7) More than 9 minutes have passed from the defrost operation start.

NOTE:

The defrost operation does not start immediately even if the above conditions are met, because these conditions may be met temporarily depending on the refrigerant system variability.

The defrost operations start when these conditions are met continuously for a certain period of time.

11.3 Function Setting

The function setting should be performed during the outdoor unit stoppage. This setting is not available during other Setting.

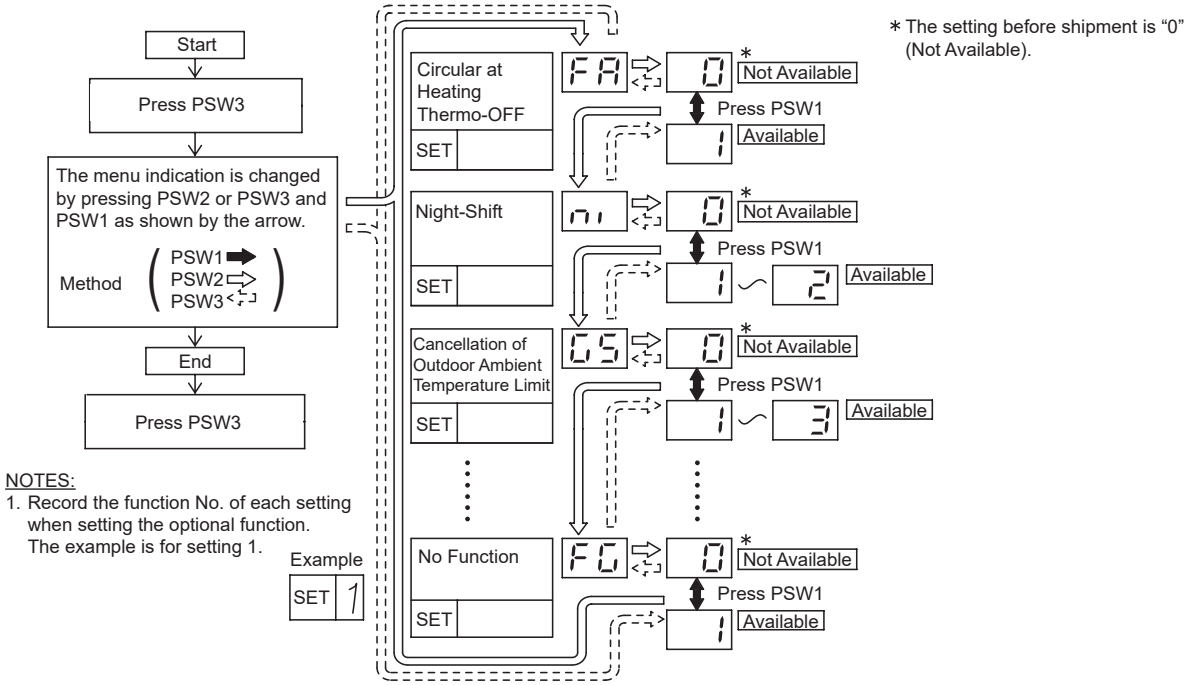

11.3.1 Function Setting Item

No.	Setting Item	7-Segment Display		Contents
		Item	No.	
1	Circulator Function at Heating Thermo-OFF	FA	00	No setting
			01	No function
2	Night Shift (Low Noise)	Ni	00	No setting
			01	Setting night shift
3	Cancellation of Outdoor Ambient Temperature Limit for Heating	GH	00	No setting
			01	No function
4	Cancellation of Outdoor Ambient Temperature Limit for cooling	GC	00	No setting
			01	Outdoor ambient temperature limit is ineffective
5	Defrost for Cold Area (Change of Defrost Condition)	Jo	00	No setting
			01	Condition 2 of defrost operation for cold area
6	SLo (IU Fan Speed) Defrost Setting	bJ	00	No setting
			01	No function
7	Cancellation of Hot Start	HT	00	No setting (Hot start control is available)
			01	Cancellation of hot start
8	Priority Capacity Mode for Cooling	cU	00	No setting
			01	Adjust the compressor speed to improve the cooling capacity
9	Priority Capacity Mode for Heating	hU	00	No setting
			01	Adjust the compressor speed to improve the heating capacity
10	Energy Saving Mode for Cooling	SC	00	No setting
			01	No function
11	Energy Saving Mode for Heating	SH	00	No setting
			01	No function
12	Low Noise Setting	dB	00	No setting
			01	Low noise setting mode
13	Demand Function Setting	dE	00	No setting
			01	No function
14	Wave Function Setting	UE	00	No setting
			01	No function
15	Low Outlet Temperature Protection In Cooling Mode1	Fb	00	No setting
				01: No Function
16	Low Outlet Temperature Protection In Cooling Mode2	Fc	00	No setting
			01	No function
17	Superheat of Exchanger Setting	E1	00	No setting
			01	No function
18	Capacity Setting	Co	00	No setting
			01	Test setting
19	Oil Heater Function	F1	00	No setting
			01	Oil Heater setting is effective
20	No function	F2~F5	00	No setting
			01	No function

11.3.2 Night Shift (Function Setting “ni”)

Press “PSW1” and select the setting condition “0” to “1” for the Night Shift or Auto Night Shift“ ni ”.
Then, this function can be set.

“ni”=1 reduces the upper limit of the outdoor fan rotation and the compressor frequency as shown below in cooling and heating operation.

Night Shift ni=1 (Cooling operation)

(1) Outdoor Fan

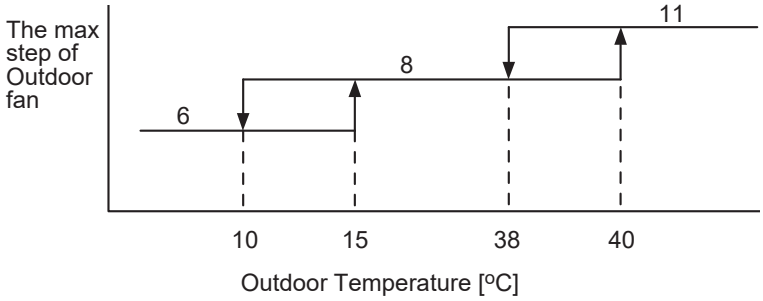

(2) Frequency Range

Outdoor Unit Capacity(kBtu/h)	When Night Shift is not Set ni=0	Maximum Frequency (Hz)	When Night Shift is Set ni=1	Maximum Frequency(Hz)	Target Operating Noise (dB)	Capacity ratio (ni=1)
2HP		75		40	39	65%
2.5HP		75		42	42	60%
3HP		75		47	43	75%

Night Shift ni=1 (Heating operation)

(1) Outdoor Fan

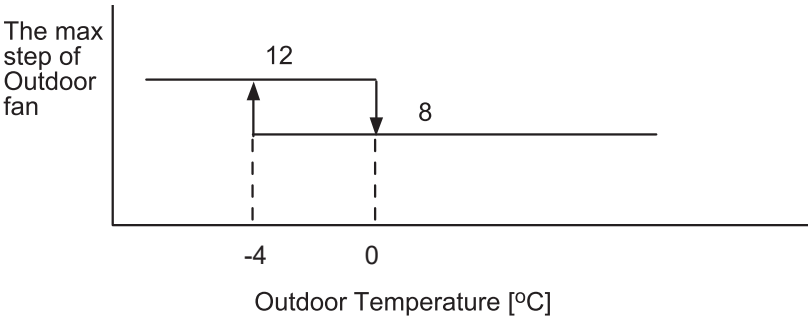

(2) Frequency Range

Outdoor Unit Capacity (HP)	Night-Shift is not set ni=0 Maximum Frequency (Hz)					Night-Shift is not set ni=1 Maximum Frequency (Hz)	Capacity ratio (ni=1)
	Outdoor Temperature	Ta< -15°C	-15°C≤Ta<12°C	2°C≤Ta<24°	24°C≤Ta		
2	/	75	80	75	70	30	60%
2.5	/	90	95	85	75	40	60%
3	/	95	95	85	80	40	60%

Note: Capacity ratio relative to normal capacity

11.3.3 Cancellation of Outdoor Ambient Temperature Limit for cooling (Function Setting “GC”)

Press “PSW1” and select the setting condition “0” or “1” for Cancellation of Outdoor Ambient Temperature limit “ GC ”. Then, this function can be set.
The cooling operation is continued even under a low temperature.

“GH” Setting Condition	Operation Mode for Cancellation
0	Not Available (Default Setting)
1	Outdoor ambient temperature limit is ineffective

Heating Operation	
The limitation of the permissible outdoor temperature area in cooling operation (factory setting) shown in the figure at the right is canceled. However the upper limit for cooling operation can NOT be cancelled. NOTE: When the outdoor ambient temperature limit for cooling operation is cancelled, the operation may stop due to decreasing low pressure since the protection control is not cancelled.	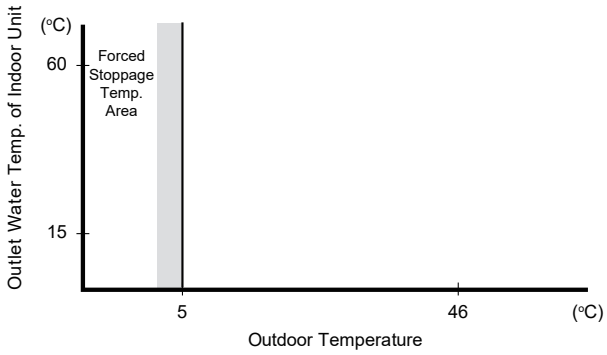

NOTE:
If this function is set and the outdoor unit operates in the operation stoppage area shown in the above figure for a long time, some alarm codes by abnormal operation may occur and the outdoor unit may be damaged since outdoor ambient temperature limit control is cancelled.
If the alarm codes occur frequently, contact your distributor or contractor.

11.3.4 Change of Defrost Condition (Function Setting “Jo”)

Press “PSW1” and select the setting condition “0” or “1” for Change of Defrost Condition “ Jo ”. This function changes the defrost condition as shown below.

“Jo” Setting Condition	Control for Standard When Change of Defrost Condition is NOT Set (”Jo”=0)`	Control for Cold Area When Change of Defrost Condition is Set (”Jo”=1)
Temperature Conditions under Defrosting Operation	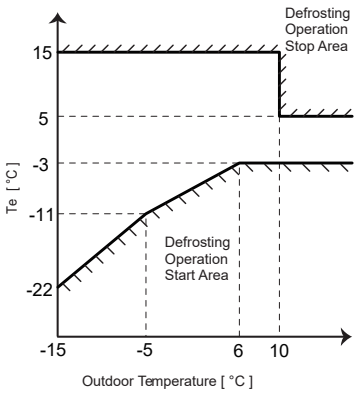	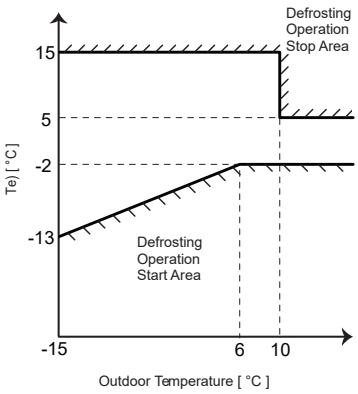

11.3.5 Priority Capacity Mode for Cooling (Function Setting “cU”)

If the cooling capacity seems insufficient during the normal operation, press “PSW1” and select the setting condition “0” to “1” Priority Capacity Mode Setting “ cU ”. By setting this function, the target frequency of the compressor is set higher only for cooling operation.

Outdoor Unit Capacity (HP)	Priority Capacity Mode for Cooling is not set cU=0	Maximum Frequency (Hz)	Priority Capacity Mode for Cooling is not set cU=1	Maximum Frequency (Hz)
2		75		90
2.5		75		90
3		75		90

NOTE:

The upper limit frequency of the compressor can NOT be changed by Priority Capacity Mode Setting.

11.3.6 Priority Capacity Mode for Heating (Function Setting “hU”)

If the heating capacity seems insufficient during the normal operation, press “PSW1” and select the settin condition “0” or “1” at the Compressor Frequency Control Target Value for Heating “ hU ”. By setting this function, the target frequency of the compressor is set higher only for heatling operation.

Outdoor Unit Capacity (HP)	Priority Capacity Mode for Heating is not set hU=0 Maximum Frequency(Hz)					Priority Capacity Mode for Heating is not set hU=1 Maximum Frequency (Hz)
	Outdoor Temperature	Ta< -15°C	-15°C≤Ta<12°C	12°C≤Ta<24°C	24°C≤Ta	
2	/	75	80	75	70	95
2.5	/	90	95	85	75	95
3	/	95	95	85	80	95

NOTES:

Increase rates are approximate, these may change slightly depending on the outdoor unit model.

11.3.7 Low Noise Setting (Function Setting “dB” Quiet Mode)

Receive Master Controller Lownoise_mode ,then the setting condition “0” to “1” at the Low Noise Setting “dB” to reduce the upper limit of the compressor frequency and the outdoor fan rotation.

NOTES:

1. By setting this function, the compressor frequency and the outdoor fan motor rotation frequency are forcibly reduced and so the outdoor unit capacity decreases and the unit operation range is limited.
2. Reduction rates are approximate, these may change slightly depending on the outdoor unit model.

Sound Reduced Function (db=1) (Cooling operation)

(1) Outdoor Fan

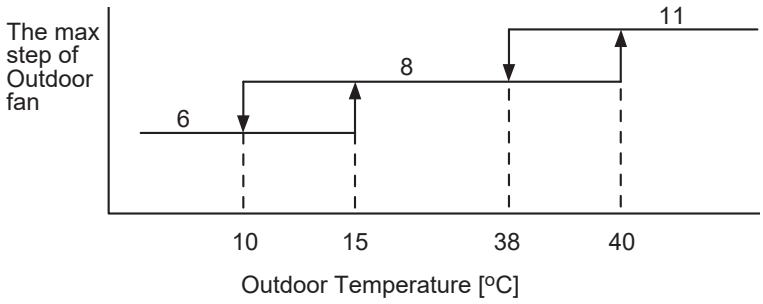

(2) Frequency Range

Outdoor Unit Capacity(kBtu /h)	Sound Reduced Funtion for Heating is not set db=0	Maximum Frequency(Hz)	Sound Reduced Funtion for Heating is not set db=1	Maximum Frequency(Hz)	Target Operating Noise (dB)	Capacity ratio (dB=1)
2HP		75		40	39	65%
2.5HP		75		42	42	60%
3HP		75		47	43	75%

Sound Reduced Function (db=1) (Heating operation)

(1) Outdoor Fan

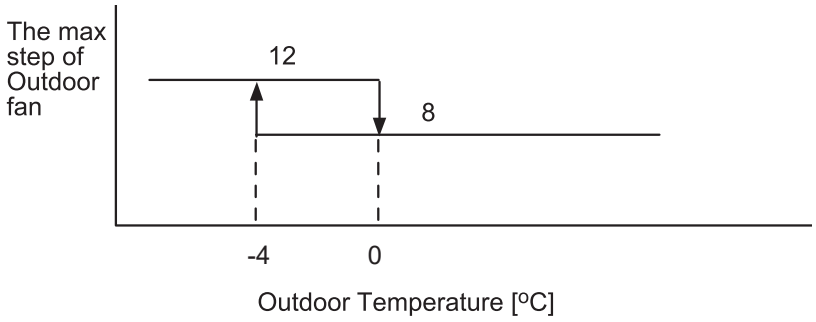

(2) Frequency Range

Outdoor Unit Capacity (HP)	Sound Reduced Funtion for Heating is not set db=0 Maximum Frequency(Hz)					Sound Reduced Funtion for Heating is not set db=0 Maximum Frequency (Hz)				Target Operating Noise(dB)	Capacity ratio (dB=1)
	Outdoor Temperature	Ta< -15°C	-15°C≤Ta<12°C	12°C≤Ta<24°C	24°C≤Ta	Ta< -15°C	-15°C≤Ta<12°C	12°C≤Ta<24°C	24°C≤Ta		
2	/	75	80	75	70	45	30	45	40	39	60%
2.5	/	90	95	85	75	55	40	60	45	42	60%
3	/	95	95	85	80	60	40	60	50	43	60%

11.3.8 Oil Heater Function

Press “PSW1” and select the setting condition “0” or “1” for Oil Heater Function “F1”. This function controls the on and off status of oil heater.

When Oil Heater Funtion for Heating is not set F1=0, condition of oil heater is OFF,
When Oil Heater Funtion for Heating is set F1=1, condition of Oil Heater is shown as below.

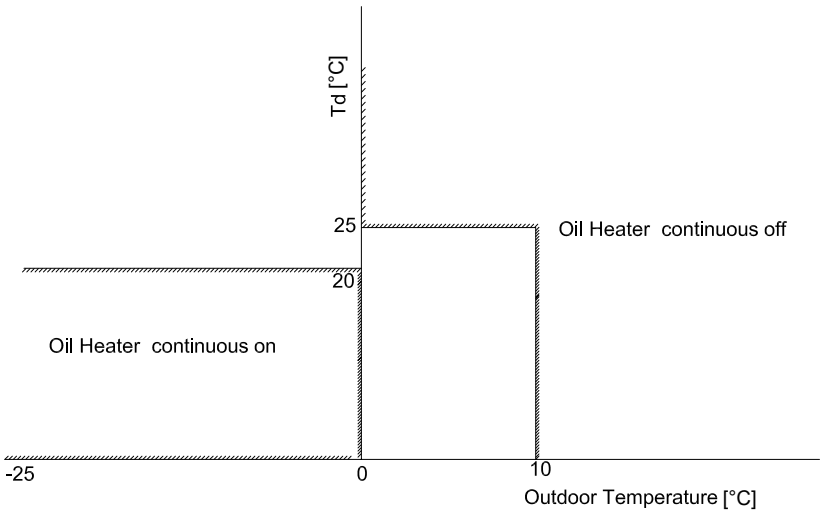

11.3.9 Night-Shift Demand

Receive Master Controller Night-Shift Demand to reduce the upper limit of the compressor frequency and outdoor unit model.

NOTES:
By setting this function ,the compressor frequency and the outdoor fan motor rotation frequency are forcibly reduced and so the outdoor unit capacity decreases .

Night-Shift Demand fucntion (Cooling operation)

(1) Outdoor Fan
The max step of outdoor fan Fomax:
Fomax=night_shift_demand/100*FoA (Fomax≥6steps)
FoA: See the figure below.

Note: If Fomax calculated value is less than 1, then round off the decimal.
The calculated valve is 8.8 steps, 8 steps will be used.

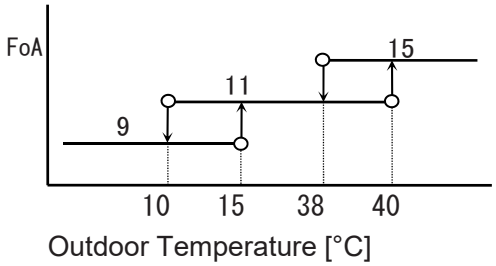

(2) Frequency Range

Outdoor Unit Capacity (HP)	Night-Shift Demand fucntion for Cooling is not set	Maximum Frequency (Hz) Fimax	Night-Shift Demand fucntion for Cooling is set	Maximum Frequency (Hz) F_night-shift	Target Operating Noise (dB)
2		75		(Night—shift Demand)× Fimax/100×1.25-20(F_night-shift≥20Hz)	35
2.5		75		(Night—shift Demand)× Fimax/100(F_night-shift≥30Hz)	38
3		75			39

Night-Shift Demand fucntion (Heating operation)

(1) Outdoor Fan
The max step of outdoor fan Fomax:
Fomax=night_shift_demand/100*FoH (Fomax≥6steps)
FoH:See the figure below

Note: If Fomax calculated value is less than 1, then round off the decimal.
The calculated valve is 8.8 steps, 8 steps will be used.

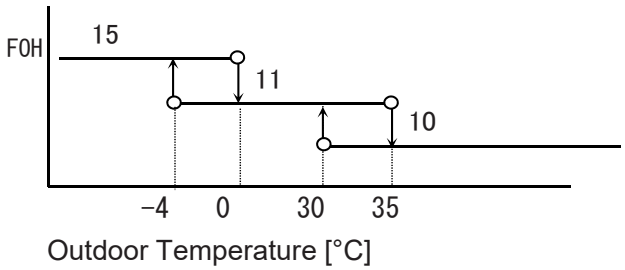

(2) Frequency Range

Outdoor Unit Capacity (HP)	Night-Shift Demand fucntion for Heating is not set db=0 Maximum Frequency (Hz)					Night-Shift Demand fucntion Maximum Frequency (Hz) F_night-shift	Target Operating Noise (dB)
	Outdoor Temperature	Ta< -15°C	-15°C≤Ta<12°C	12°C≤Ta<24°C	24°C≤Ta		
2	/	75	80	75	70	(Night—shift Demand) ×Fimax/100×1.25-20(F_night-shift≥20Hz)	35
							38
2.5	/	90	95	85	75	(Night—shift Demand) ×Fimax/100(F_night-shift≥30Hz)	
3	/	95	95	85	80		39

Note: If F_night-shift calculated value is less than 1, then round off the decimal.
The calculated valve is 35.7Hz ,35 steps will be used.

11.3.10 Test run

The function setting should be performed during the outdoor unit stoppage and normal mode. This setting is not available during other Setting.
To start the Test Run: Press PSW1 and PSW3 for 3 seconds .
To cancel the Test Run: Press PSW1 and PSW3 for 3 seconds.

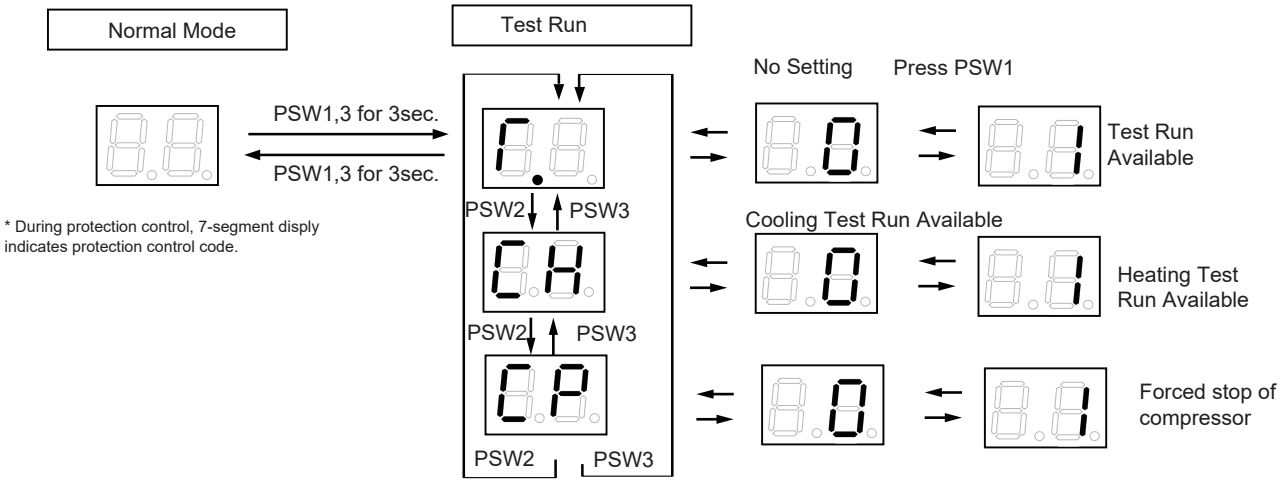

Note:

1.In case of alarm, T. is replaced by alarm code.
2.The control of Test Run operation is the same as normal operation control.
3.. When Test Run is not required, do not forget to exit the Test Run set T. to 0 or press PS and PSW3